Introduction to Artificial Intelligence and Machine Learning

IE 206
Multi-layer Perceptrons

March 13, 2026.

1. Recap
   - MLP-Data Perspective
2. Optimization Concepts
   - Gradient Descent
   - Stochastic Gradient Descent
   - Mini-batch SGD
3. Sample-wise Gradient Computation
   - MLP for prediction tasks

Multi Layer Perceptron - Data Perspective

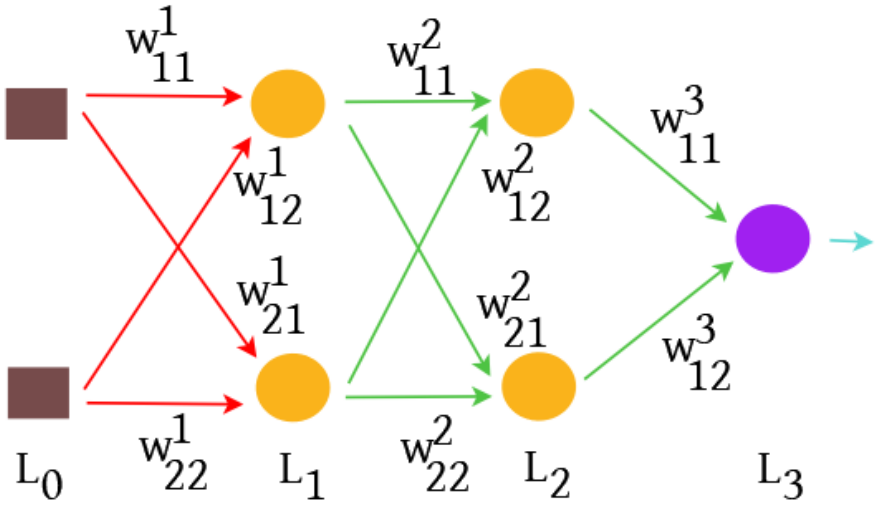

- **Input:** Training Data $D = \{(x^s, y^s)\}_{s=1}^{S}$.
- For each sample x^s the prediction $\hat{y}^s = \text{MLP}(x^s)$.
- **Error:** $e^s = E(y^s, \hat{y}^s)$.
- **Aim:** To minimize $\sum_{s=1}^{S} e^s$.

Multi Layer Perceptron - Data Perspective

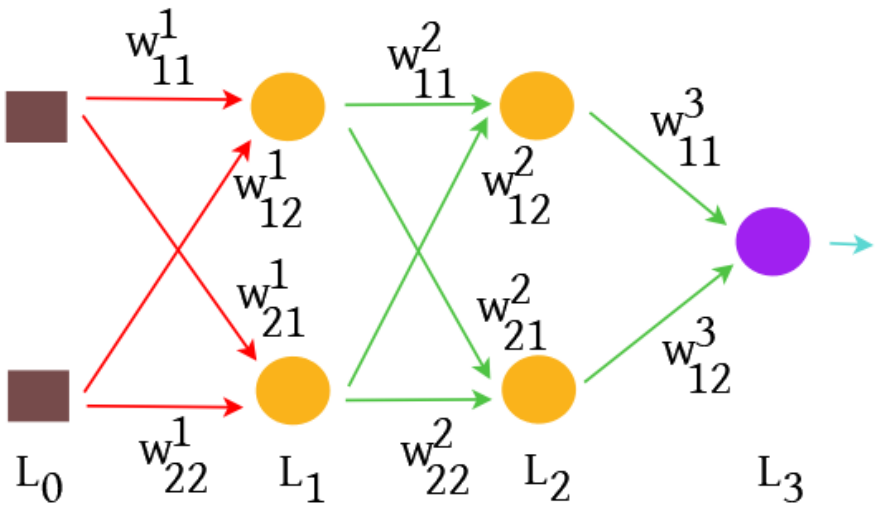

Optimization perspective

- Given training data $D = \{(x^s, y^s)\}_{s=1}^{S}$,

$$\min \sum_{s=1}^{S} e^s$$

Multi Layer Perceptron - Data Perspective

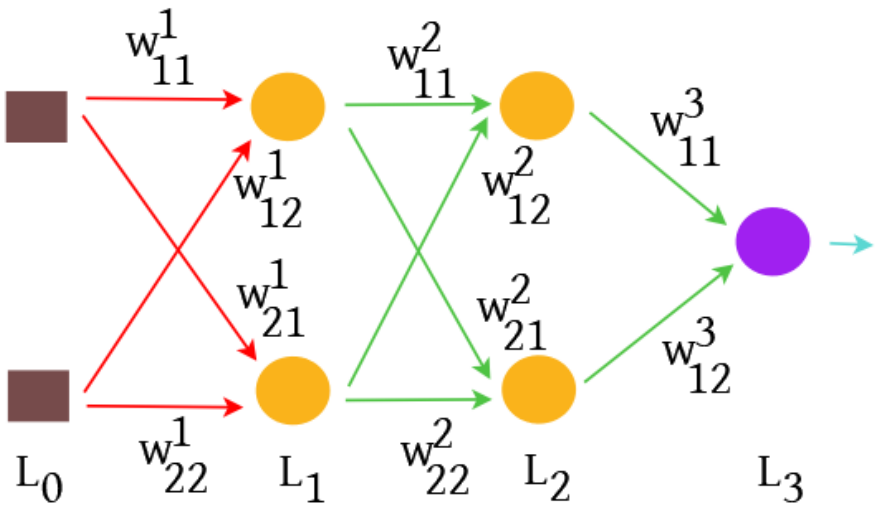

Optimization perspective

- Given training data $D = \{(x^s, y^s)\}_{s=1}^{S}$,

$$\min \sum_{s=1}^{S} e^s = \sum_{s=1}^{S} E(y^s, \hat{y}^s)$$

Multi Layer Perceptron - Data Perspective

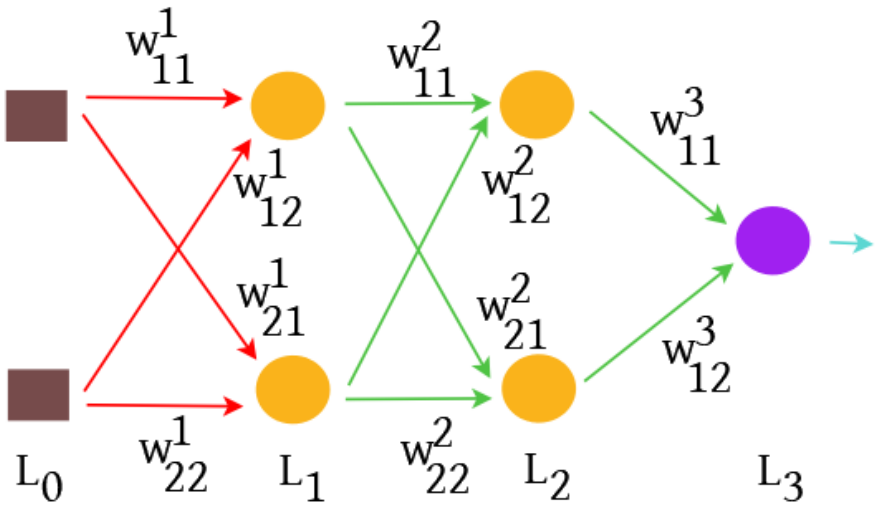

Optimization perspective

- Given training data $D = \{(x^s, y^s)\}_{s=1}^{S}$,

$$\min \sum_{s=1}^{S} e^s = \sum_{s=1}^{S} E(y^s, \hat{y}^s) = \sum_{s=1}^{S} E(y^s, \mathrm{MLP}(x^s))$$

Multi Layer Perceptron - Data Perspective

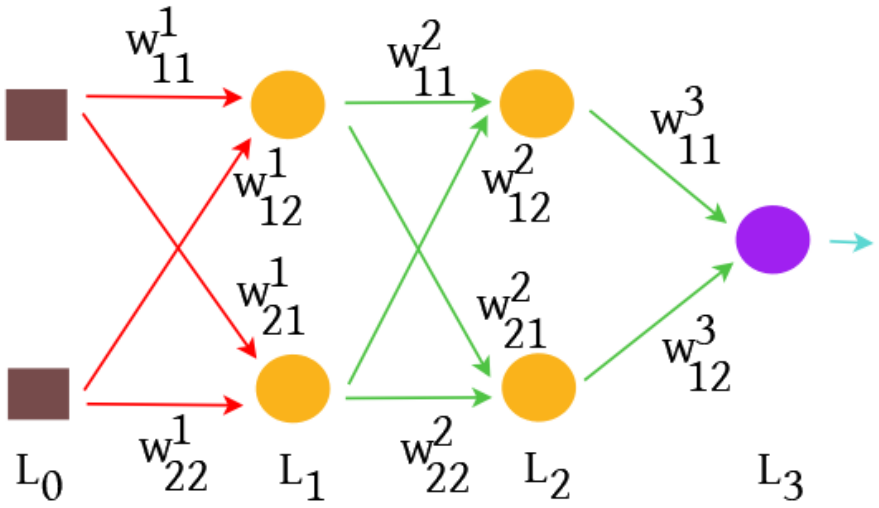

Optimization perspective

- Given training data $D = \{(x^s, y^s)\}_{s=1}^{S}$,

$$\min \sum_{s=1}^{S} e^s = \sum_{s=1}^{S} E(y^s, \hat{y}^s) = \sum_{s=1}^{S} E(y^s, \text{MLP}(x^s))$$

- Note: The minimization is over the weights of the MLP $W^1, \ldots, W^L$, where L denotes number of layers in MLP.

MLP - Data Perspective: A Simple Example

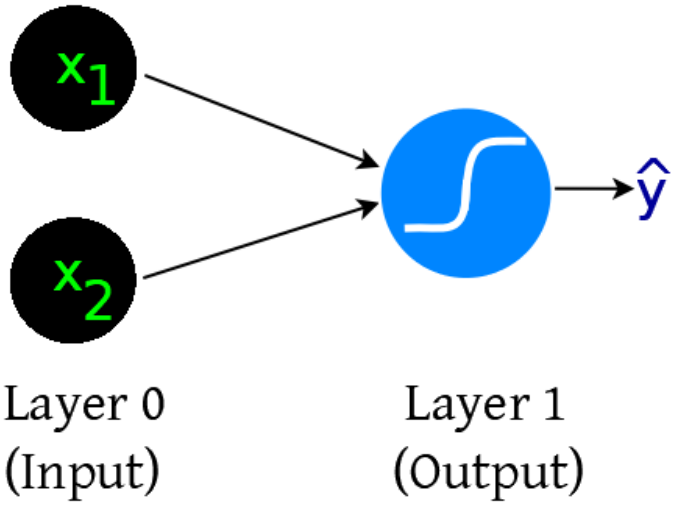

$$\hat{y} = \sigma(w_{11}^1 x_1 + w_{12}^1 x_2) = \frac{1}{1 + \exp\left(-[w_{11}^1 x_1 + w_{12}^1 x_2]\right)}$$

MLP - Data Perspective: A Simple Example

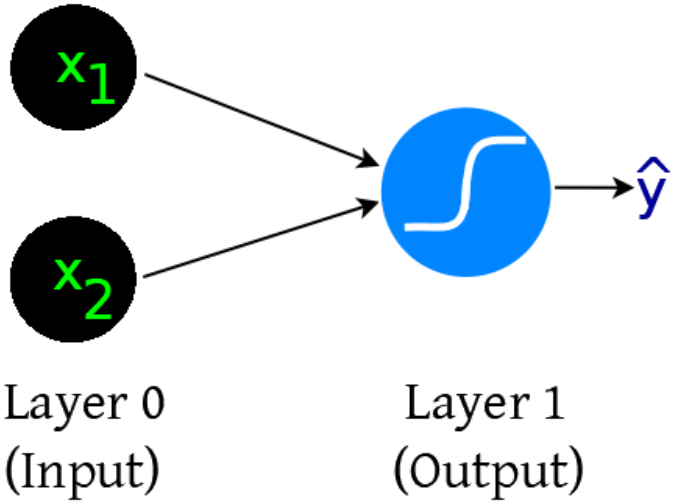

$$\hat{y} = \sigma(w_{11}^1 x_1 + w_{12}^1 x_2) = \frac{1}{1 + \exp\left(-[w_{11}^1 x_1 + w_{12}^1 x_2]\right)}$$

Property of 0-1 sigmoid $\sigma : \mathbb{R} \to [0, 1]$

- σ is continuous
- σ is monotonic
- $\sigma(z) \to \begin{cases} 0 & \text{if } z \to -\infty \\ 1 & \text{if } z \to +\infty \end{cases}$

MLP - Data Perspective: A Simple Example

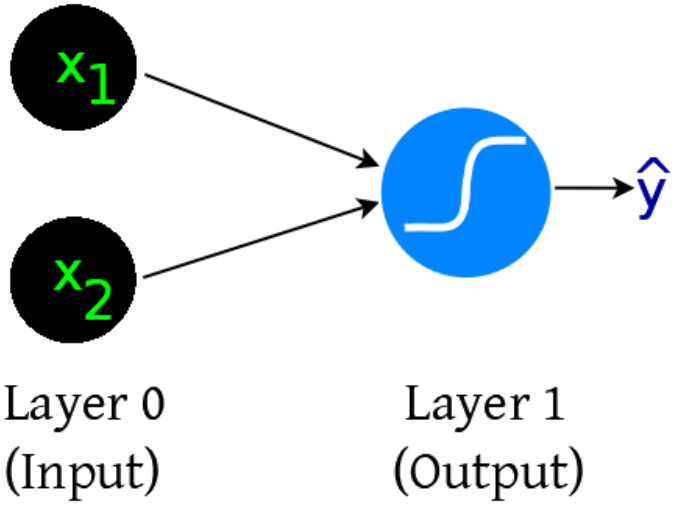

- Let

$$
\begin{aligned}
D = \{&(x^1 = (-3, -3), y^1 = 1),\\
&(x^2 = (-2, -2), y^2 = 1),\\
&(x^3 = (4, 4), y^3 = 0),\\
&(x^4 = (2, -5), y^4 = 0)\}.
\end{aligned}
$$

MLP - Data Perspective: A Simple Example

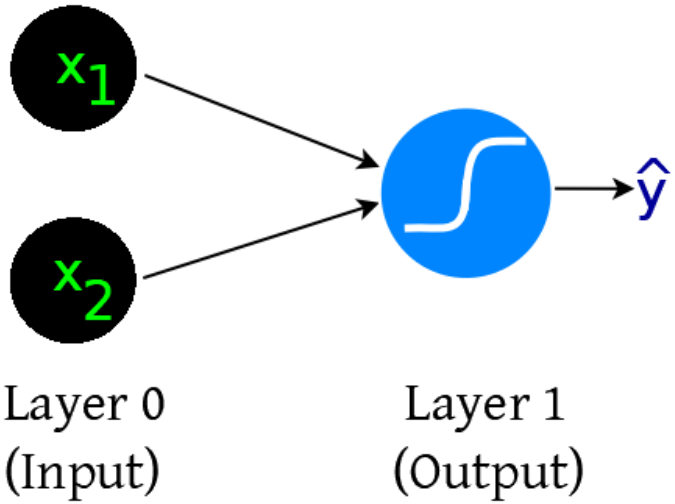

x_1	x_2	y	$\hat{y} = \sigma(w_{11}^1 x_1 + w_{12}^1 x_2)$
-3	-3	1	$\sigma(-3w_{11}^1 - 3w_{12}^1)$
-2	-2	1	$\sigma(-2w_{11}^1 - 2w_{12}^1)$
4	4	0	$\sigma(4w_{11}^1 + 4w_{12}^1)$
2	-5	0	$\sigma(2w_{11}^1 - 5w_{12}^1)$

MLP - Data Perspective: A Simple Example

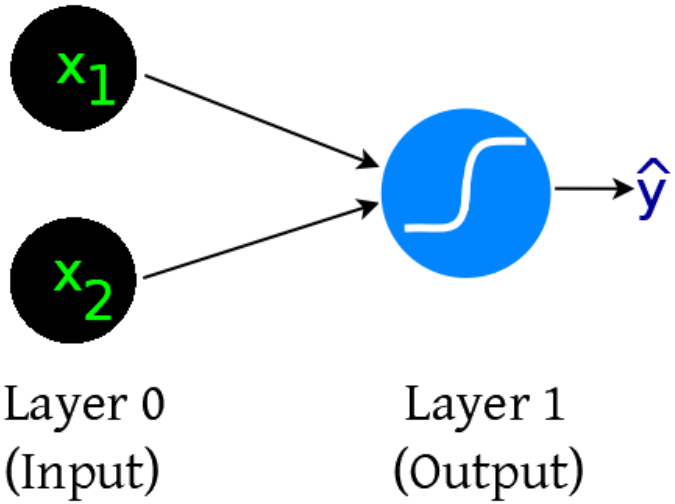

x_1	x_2	y	$\hat{y} = \sigma(w_{11}^1 x_1 + w_{12}^1 x_2)$
-3	-3	1	$\sigma(-3w_{11}^1 - 3w_{12}^1)$
-2	-2	1	$\sigma(-2w_{11}^1 - 2w_{12}^1)$
4	4	0	$\sigma(4w_{11}^1 + 4w_{12}^1)$
2	-5	0	$\sigma(2w_{11}^1 - 5w_{12}^1)$

- **Assume:** $\text{Err}(y, \hat{y}) = (y - \hat{y})^2$.

MLP - Data Perspective: A Simple Example

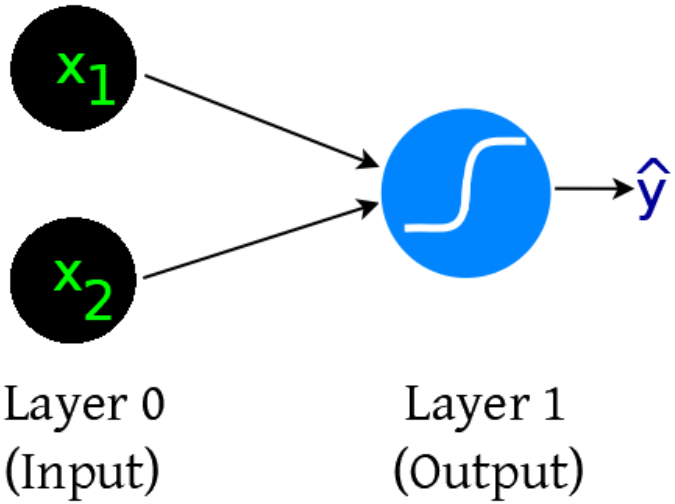

x_1	x_2	y	$\hat{y} = \sigma(w_{11}^1 x_1 + w_{12}^1 x_2)$
-3	-3	1	$\sigma(-3w_{11}^1 - 3w_{12}^1)$
-2	-2	1	$\sigma(-2w_{11}^1 - 2w_{12}^1)$
4	4	0	$\sigma(4w_{11}^1 + 4w_{12}^1)$
2	-5	0	$\sigma(2w_{11}^1 - 5w_{12}^1)$

- **Assume:** $\text{Err}(y, \hat{y}) = (y - \hat{y})^2$.
- Popularly called the squared error.

MLP - Data Perspective: A Simple Example

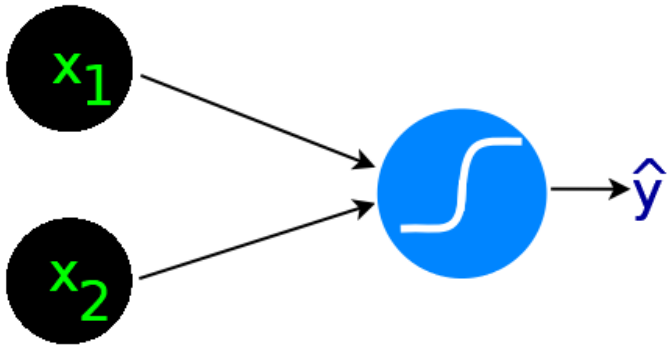

Layer 0 (Input) Layer 1 (Output)

x_1	x_2	y	$\hat{y} = \sigma(w_{11}^1 x_1 + w_{12}^1 x_2)$
-3	-3	1	$\sigma(-3w_{11}^1 - 3w_{12}^1)$
-2	-2	1	$\sigma(-2w_{11}^1 - 2w_{12}^1)$
4	4	0	$\sigma(4w_{11}^1 + 4w_{12}^1)$
2	-5	0	$\sigma(2w_{11}^1 - 5w_{12}^1)$

- Total error (or loss):

$$E = \sum_{i=1}^{4} e^i = \sum_{i=1}^{4} \mathrm{Err}(y^i, \hat{y}^i)$$

MLP - Data Perspective: A Simple Example

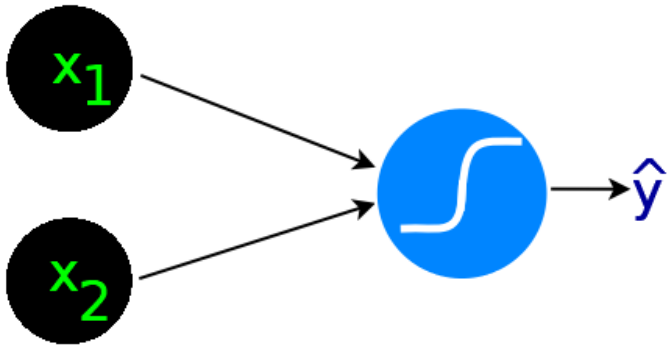

Layer 0 (Input) Layer 1 (Output)

x_1	x_2	y	$\hat{y} = \sigma(w_{11}^1 x_1 + w_{12}^1 x_2)$
-3	-3	1	$\sigma(-3w_{11}^1 - 3w_{12}^1)$
-2	-2	1	$\sigma(-2w_{11}^1 - 2w_{12}^1)$
4	4	0	$\sigma(4w_{11}^1 + 4w_{12}^1)$
2	-5	0	$\sigma(2w_{11}^1 - 5w_{12}^1)$

- Total error (or loss):

$$E = \sum_{i=1}^{4} \left(y^i - \frac{1}{1 + \exp\left(-\left[w_{11}^1 x_1^i + w_{12}^1 x_2^i\right]\right)} \right)^2$$

MLP - Data Perspective: A Simple Example

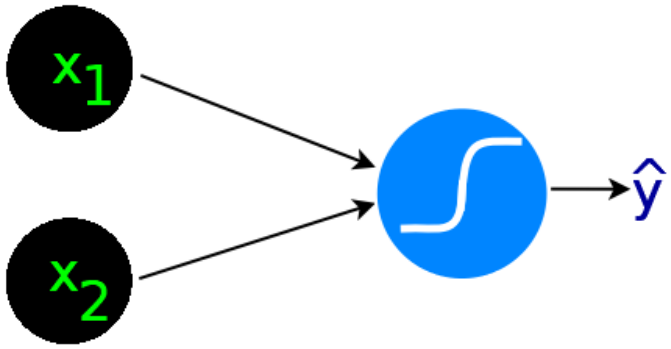

Layer 0 (Input) Layer 1 (Output)

x_1	x_2	y	$\hat{y} = \sigma(w_{11}^1 x_1 + w_{12}^1 x_2)$
-3	-3	1	$\sigma(-3w_{11}^1 - 3w_{12}^1)$
-2	-2	1	$\sigma(-2w_{11}^1 - 2w_{12}^1)$
4	4	0	$\sigma(4w_{11}^1 + 4w_{12}^1)$
2	-5	0	$\sigma(2w_{11}^1 - 5w_{12}^1)$

- Aim: To minimize the total error (or loss), which is

$$\min_{w_{11}^1, w_{12}^1} E = \sum_{i=1}^{4} \left(y^i - \frac{1}{1 + \exp\left(-\left[w_{11}^1 x_1^i + w_{12}^1 x_2^i\right]\right)} \right)^2$$

MLP - Data Perspective: A Simple Example

Visualizing the loss surface:

x_1	x_2	y	$\hat{y} = \sigma(w_{11}^1 x_1 + w_{12}^1 x_2)$
-3	-3	1	$\sigma(-3w_{11}^1 - 3w_{12}^1)$
-2	-2	1	$\sigma(-2w_{11}^1 - 2w_{12}^1)$
4	4	0	$\sigma(4w_{11}^1 + 4w_{12}^1)$
2	-5	0	$\sigma(2w_{11}^1 - 5w_{12}^1)$

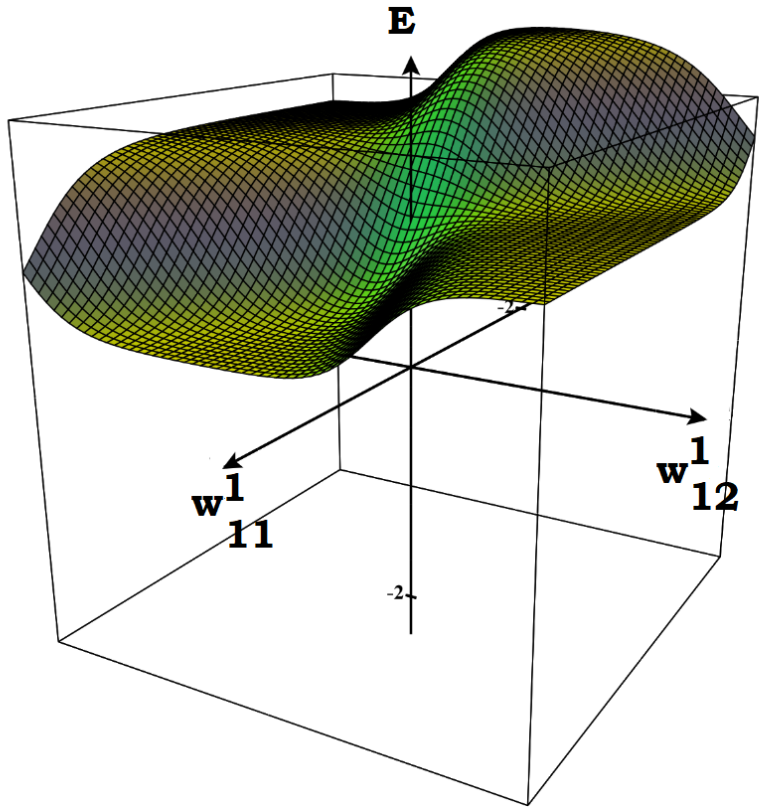

$$E = \sum_{i=1}^{4} \left(y^i - \frac{1}{1 + \exp\left(-\left[w_{11}^1 x_1^i + w_{12}^1 x_2^i\right]\right)} \right)^2$$

Optimization Concepts

General Optimization Problem

$$\min_{x \in \mathcal{C}} f(x)$$

General Optimization Problem

$$\min_{x \in \mathcal{C}} f(x)$$

- f is called objective function and $\mathcal{C}$ is called feasible set.
- Let $f^* = \min_{x \in \mathcal{C}} f(x)$ denote the **optimal objective function value**.
- **Optimal Solution Set** $S^* = \{x \in \mathcal{C} : f(x) = f^*\}$.
- Let us denote by x^* an optimal solution in S^*.

General Optimization Problem

$$\min_{x \in \mathcal{C}} f(x) \tag{OP}$$

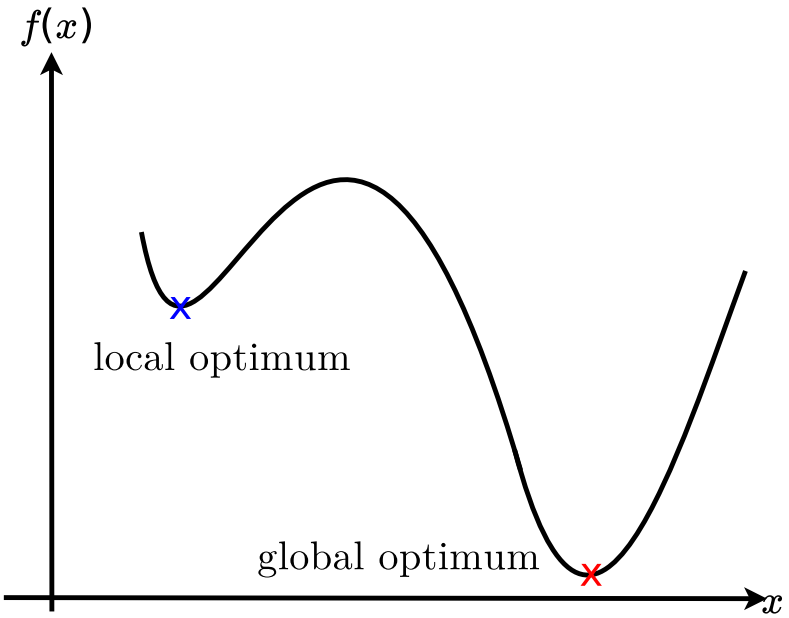

General Optimization Problem

$$\min_{x \in \mathcal{C}} f(x) \tag{OP}$$

Local Optimal Solution

A solution z to (OP) is called local optimal solution if $f(z) \leq f(\hat{z})$, $\forall \hat{z} \in \mathcal{N}(z, \epsilon)$ for some $\epsilon > 0$.

Note: $\mathcal{N}(z, \epsilon)$ denotes suitable $\epsilon-$neighborhood of z.

General Optimization Problem

$$\min_{x \in \mathcal{C}} f(x) \tag{OP}$$

Local Optimal Solution

A solution z to (OP) is called local optimal solution if $f(z) \leq f(\hat{z})$, $\forall \hat{z} \in \mathcal{N}(z, \epsilon)$ for some $\epsilon > 0$.

Note: $\mathcal{N}(z, \epsilon)$ denotes suitable $\epsilon-$neighborhood of z.

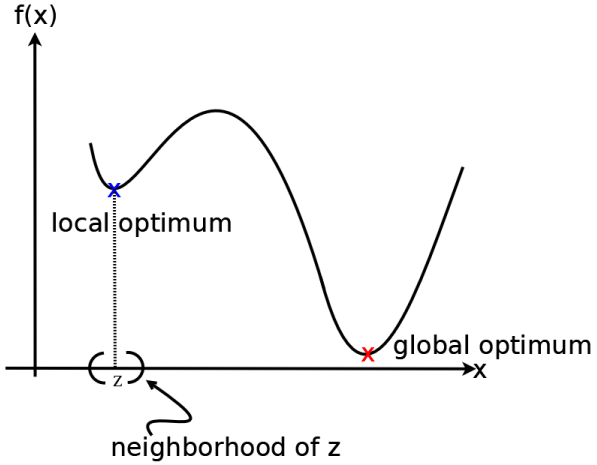

General Optimization Problem

$$\min_{x \in \mathcal{C}} f(x) \tag{OP}$$

Local Optimal Solution

A solution z to (OP) is called local optimal solution if $f(z) \leq f(\hat{z})$, $\forall \hat{z} \in \mathcal{N}(z, \epsilon)$ for some $\epsilon > 0$.

Note: $\mathcal{N}(z, \epsilon)$ denotes suitable $\epsilon-$neighborhood of z.

$\epsilon-$ Neighborhood of $z \in \mathcal{C}$

$$\mathcal{N}(z, \epsilon) = \{u \in \mathcal{C} : \text{dist}(z, u) \leq \epsilon\}.$$

General Optimization Problem

$$\min_{x \in \mathcal{C}} f(x) \tag{OP}$$

Local Optimal Solution

A solution z to (OP) is called local optimal solution if $f(z) \leq f(\hat{z})$, $\forall \hat{z} \in \mathcal{N}(z, \epsilon)$ for some $\epsilon > 0$.

Global Optimal Solution

A solution z to (OP) is called global optimal solution if $f(z) \leq f(\hat{z})$, $\forall \hat{z} \in \mathcal{C}$.

General Optimization Problem

$$\min_{x \in \mathcal{C}} f(x)$$

- **General Assumption:** $\mathcal{C} \subseteq \mathbb{R}^d$.

High Dimensional Representation - Notations

- Gradient of a function $f : \mathbb{R}^d \to \mathbb{R}$ at a point x

$$\nabla f(x) = \begin{pmatrix} \frac{\partial f(x)}{\partial x_1} \\ \frac{\partial f(x)}{\partial x_2} \\ \vdots \\ \vdots \\ \vdots \\ \frac{\partial f(x)}{\partial x_d} \end{pmatrix}$$

General Optimization Problem

$$\min_{x \in \mathcal{C}} f(x)$$

- $\mathcal{C} \subseteq \mathbb{R}^d$.
- $f : \mathcal{C} \longrightarrow \mathbb{R}$.

Algorithm Development using Descent Direction

Consider the general optimization problem:

$$\min_{x \in \mathbb{R}^d} f(x) \qquad \text{(GEN-OPT)}$$

where $f : \mathbb{R}^d \longrightarrow \mathbb{R}$.

Gradient Descent Algorithm to solve (GEN-OPT)

- Start with $x^0 \in \mathbb{R}^d$.
- For $k = 0, 1, 2, \ldots$
  - If $\|\nabla f(x^{k+1})\|_2 = 0$, set $x^* = x^k$, break from loop.
  - $d^k = -\nabla f(x^k)$.
  - $\alpha^k = \text{argmin}_{\alpha > 0} f(x^k + \alpha d^k)$.
  - $x^{k+1} = x^k + \alpha^k d^k$.
- Output x^*.

Gradient Descent for our MLP Problem

Recall: For MLP, the loss minimization problem is:

$$\min_{w=(w_{11}^1, w_{12}^1)} E(w) = \sum_{i=1}^{4} e^i(w) = \sum_{i=1}^{4} \left(y^i - \frac{1}{1 + \exp\left(-\left[w_{11}^1 x_1^i + w_{12}^1 x_2^i\right]\right)} \right)^2$$

where $E : \mathbb{R}^2 \longrightarrow \mathbb{R}$.

Gradient Descent Algorithm to solve MLP Loss Minimization Problem

- Start with $w^0 \in \mathbb{R}^d$.
- For $k = 0, 1, 2, \ldots$
  - If $\|\nabla E(w^k)\|_2 = 0$, set $w^* = w^k$, break from loop.
  - $d^k = -\nabla E(w^k)$.
  - $\alpha^k = \text{argmin}_{\alpha > 0} E(w^k + \alpha d^k)$.
  - $w^{k+1} = w^k + \alpha^k d^k$.
- Output w^*.

Gradient Descent for our MLP Problem

Recall: For MLP, the loss minimization problem is:

$$\min_{w=(w_{11}^1, w_{12}^1)} E(w) = \sum_{i=1}^{4} e^i(w) = \sum_{i=1}^{4} \left(y^i - \frac{1}{1 + \exp\left(-\left[w_{11}^1 x_1^i + w_{12}^1 x_2^i\right]\right)} \right)^2$$

Gradient Descent Algorithm to solve MLP Loss Minimization Problem

- Start with $w^0 \in \mathbb{R}^d$.
- For $k = 0, 1, 2, \ldots$
  - If $\|\nabla E(w^k)\|_2 = 0$, set $w^* = w^k$, break from loop.
  - $d^k = -\nabla E(w^k)$.
  - $\alpha^k = \text{argmin}_{\alpha > 0} E(w^k + \alpha d^k)$.
  - $w^{k+1} = w^k + \alpha^k d^k$.
- Output w^*.

Gradient Descent for our MLP Problem

Recall: For MLP, the loss minimization problem is:

$$\min_{w=(w_{11}^1, w_{12}^1)} E(w) = \sum_{i=1}^{4} e^i(w) = \sum_{i=1}^{4} \left(y^i - \frac{1}{1 + \exp\left(-\left[w_{11}^1 x_1^i + w_{12}^1 x_2^i\right]\right)} \right)^2$$

Gradient Descent Algorithm to solve MLP Loss Minimization Problem

- Start with $w^0 \in \mathbb{R}^d$.
- For $k = 0, 1, 2, \ldots$
  - If $\|\nabla E(w^k)\|_2 = 0$, set $w^* = w^k$, break from loop.
  - $d^k = -\sum_{i=1}^{4} \nabla e^i(w^k)$.
  - $\alpha^k = \text{argmin}_{\alpha > 0} E(w^k + \alpha d^k)$.
  - $w^{k+1} = w^k + \alpha^k d^k$.
- Output w^*.

Stochastic Gradient Descent for our MLP Problem

Recall: For MLP, the loss minimization problem is:

$$\min_{w=(w_{11}^1, w_{12}^1)} E(w) = \sum_{i=1}^{4} e^i(w) = \sum_{i=1}^{4} \left(y^i - \frac{1}{1 + \exp\left(-\left[w_{11}^1 x_1^i + w_{12}^1 x_2^i\right]\right)} \right)^2$$

Stochastic Gradient Descent Algorithm to solve MLP Loss Minimization Problem

- Start with $w^0 \in \mathbb{R}^d$.
- For $k = 0, 1, 2, \ldots$
  - Choose a sample $j_k \in \{1, \ldots, 4\}$.
  - $w^{k+1} \leftarrow w^k - \gamma_k \nabla_w e^{j_k}(w^k)$.

Regularized Empirical Loss Minimization - Optimization Methods

Stochastic Gradient Descent Algorithm to solve MLP Loss Minimization Problem

- Start with $w^0 \in \mathbb{R}^d$.
- For $k = 0, 1, 2, \ldots$
  - Choose a sample $j_k \in \{1, \ldots, 4\}$.
  - $w^{k+1} \leftarrow w^k - \gamma_k \nabla_w e^{j_k}(w^k)$.

$\nabla_w e^{j_k}(w^k)$: Gradient at point w^k, of e^{i_k} with respect to w. Takes only $O(d)$ time.

Under suitable conditions on γ_k ($\sum_k \gamma_k^2 < \infty$, $\sum_k \gamma_k \to \infty$), this procedure converges **asymptotically**.
For smooth functions, $O(1/k)$ convergence possible (in theory!).
Typical choice: $\gamma_k = \frac{1}{k+1}$.

Mini-Batch Stochastic Gradient Descent for our MLP Problem

Mini-batch SGD Algorithm to solve MLP Loss Minimization Problem

- Start with $w^0 \in \mathbb{R}^d$.
- For $k = 0, 1, 2, \ldots$
  - Choose a block of samples $B_k \subseteq \{1, \ldots, 4\}$.
  - $w^{k+1} \leftarrow w^k - \gamma_k \sum_{j \in B_k} \nabla_w e^j(w^k)$.

Mini-batch Stochastic Gradient Descent for our MLP Problem

Mini-batch SGD Algorithm to solve MLP Loss Minimization Problem

- Start with $w^0 \in \mathbb{R}^d$.
- For $k = 0, 1, 2, \ldots$
  - Choose a block of samples $B_k \subseteq \{1, \ldots, 4\}$.
  - $w^{k+1} \leftarrow w^k - \gamma_k \sum_{j \in B_k} \nabla_w e^j(w^k)$.

- Restrictions on γ_k similar to that in SGD.
- **Asymptotic convergence** !

GD/SGD: Crucial Step

Recall: For MLP, the loss minimization problem is:

$$\min_{w=(w_{11}^1, w_{12}^1)} E(w) = \sum_{i=1}^{4} e^i(w) = \sum_{i=1}^{4} \left(y^i - \frac{1}{1 + \exp\left(-\left[w_{11}^1 x_1^i + w_{12}^1 x_2^i\right]\right)} \right)^2$$

Crucial step in Gradient Descent Algorithm

$w^{k+1} = w^k - \alpha^k \sum_{i=1}^{4} \nabla e^i(w^k)$

Crucial step in Stochastic Gradient Descent Algorithm

$w^{k+1} \leftarrow w^k - \gamma_k \nabla_w e^{j_k}(w^k)$.

Crucial step in Mini-batch SGD Algorithm

$w^{k+1} \leftarrow w^k - \gamma_k \sum_{j \in B_k} \nabla_w e^j(w^k)$.

GD/SGD for MLP: Crucial Step

Recall: For MLP, the loss minimization problem is:

$$\min_{w=(w_{11}^1, w_{12}^1)} E(w) = \sum_{i=1}^{4} e^i(w) = \sum_{i=1}^{4} \left(y^i - \frac{1}{1 + \exp\left(-\left[w_{11}^1 x_1^i + w_{12}^1 x_2^i\right]\right)} \right)^2$$

Crucial step in Gradient Descent Algorithm

$w^{k+1} = w^k - \alpha^k \sum_{i=1}^{4} \nabla e^i(w^k)$

Crucial step in Stochastic Gradient Descent Algorithm

$w^{k+1} \leftarrow w^k - \gamma_k \nabla_w e^{j_k}(w^k).$

Crucial step in Mini-batch SGD Algorithm

$w^{k+1} \leftarrow w^k - \gamma_k \sum_{j \in B_k} \nabla_w e^j(w^k).$

Note: $\nabla e^i(w^k)$, $\nabla_w e^{j_k}(w^k)$, $\nabla e^j(w^k)$ denote sample-wise gradient computation.

GD/SGD for MLP: Sample-wise Gradient Computation

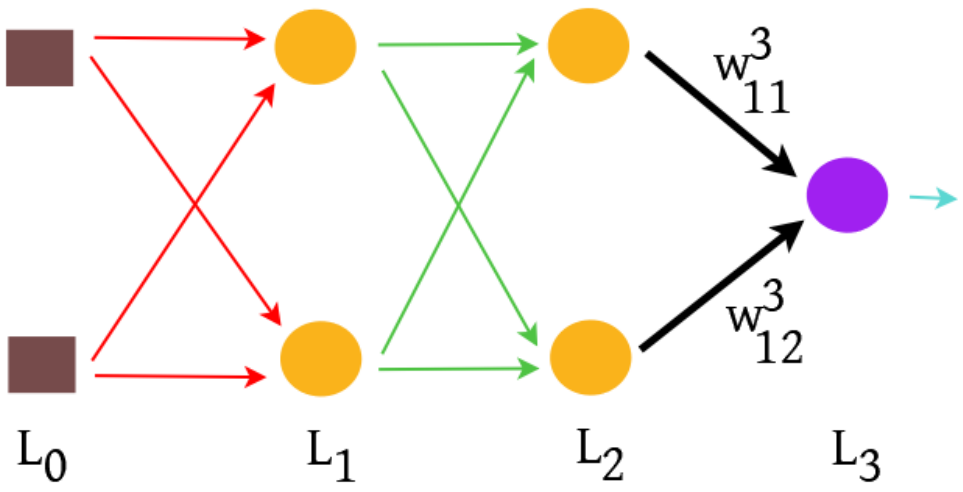

- Consider an arbitrary training sample $(x, y) \in D$.

GD/SGD for MLP: Sample-wise Gradient Computation

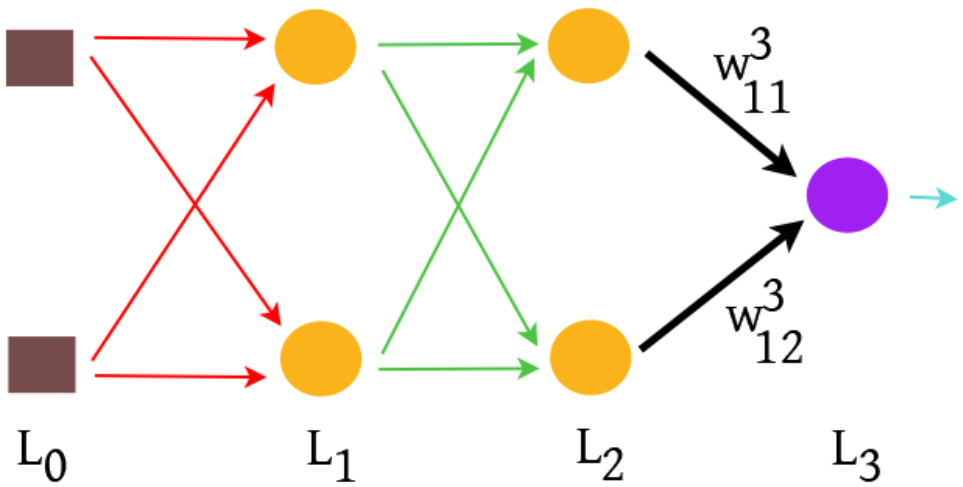

- Consider an arbitrary training sample $(x, y) \in D$.
- At layer L_3, $\hat{y} = a_1^3 = \phi\left(z_1^3\right) = \phi\left(w_{11}^3 a_1^2 + w_{12}^3 a_2^2\right)$.

GD/SGD for MLP: Sample-wise Gradient Computation

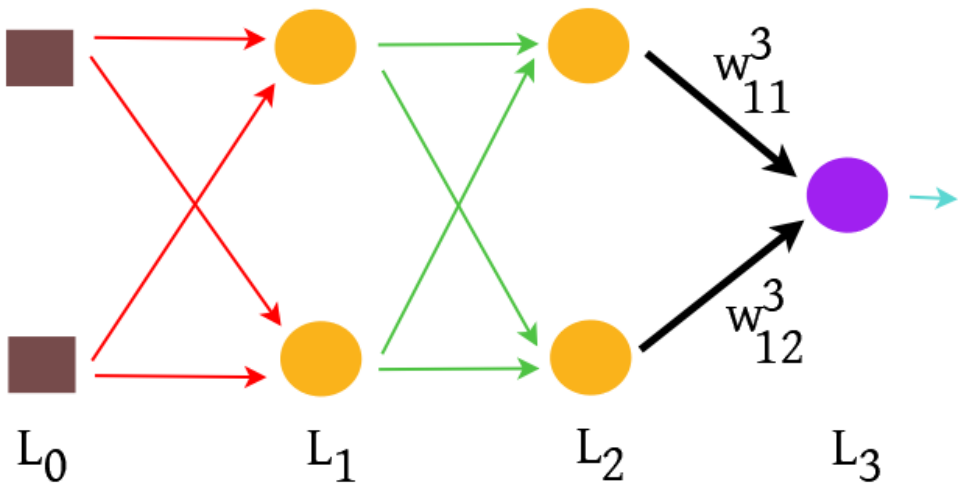

- Consider an arbitrary training sample $(x, y) \in D$.
- At layer L_3, $\hat{y} = a_1^3 = \phi\left(z_1^3\right) = \phi\left(w_{11}^3 a_1^2 + w_{12}^3 a_2^2\right)$.
- Sample-wise error: $e = (\hat{y} - y)^2$.

GD/SGD for MLP: Sample-wise Gradient Computation

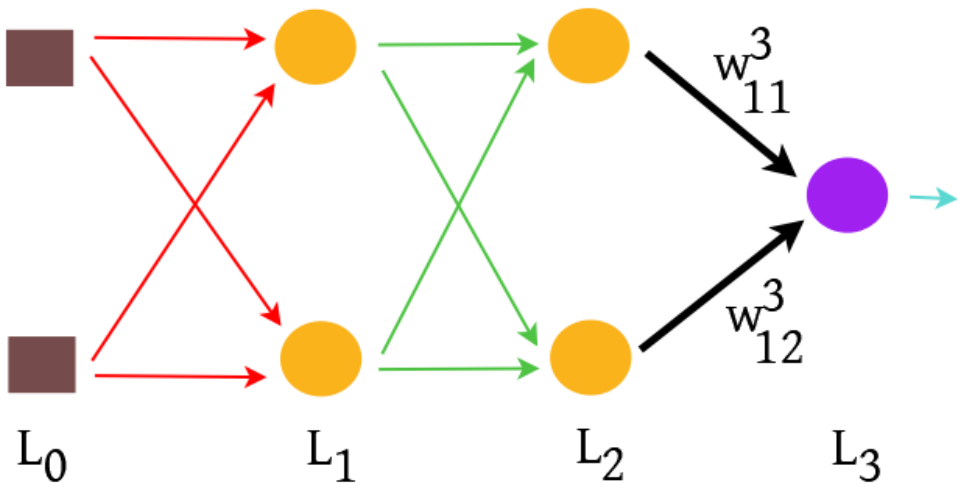

- Consider an arbitrary training sample $(x, y) \in D$.
- At layer L_3, $\hat{y} = a_1^3 = \phi\left(z_1^3\right) = \phi\left(w_{11}^3 a_1^2 + w_{12}^3 a_2^2\right)$.
- Sample-wise error: $e = (\hat{y} - y)^2$.
- **Aim:** To find $\nabla_w e = [\nabla_{w_{11}^1} e \ \nabla_{w_{12}^1} e \ \ldots \ \nabla_{w_{12}^3} e]^\top$.

GD/SGD for MLP: Sample-wise Gradient Computation

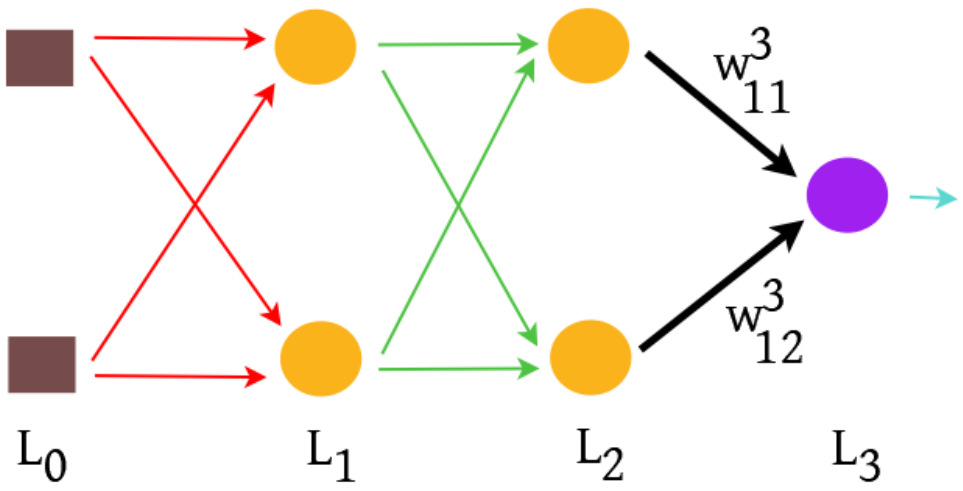

- Consider an arbitrary training sample $(x, y) \in D$.
- At layer L_3, $\hat{y} = a_1^3 = \phi\left(z_1^3\right) = \phi\left(w_{11}^3 a_1^2 + w_{12}^3 a_2^2\right)$.
- Sample-wise error: $e = (\hat{y} - y)^2$.
- **Note:** $\nabla_{w_{11}^3} e = \frac{\partial e}{\partial z_1^3} \frac{\partial z_1^3}{\partial w_{11}^3}$.

GD/SGD for MLP: Sample-wise Gradient Computation

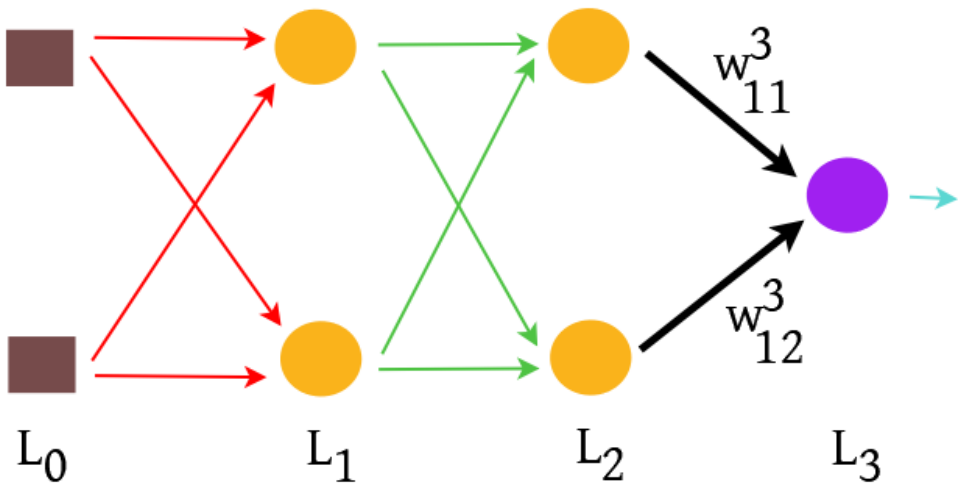

- Consider an arbitrary training sample $(x, y) \in D$.
- At layer L_3, $\hat{y} = a_1^3 = \phi\left(z_1^3\right) = \phi\left(w_{11}^3 a_1^2 + w_{12}^3 a_2^2\right)$.
- Sample-wise error: $e = (\hat{y} - y)^2$.
- **Note:** $\nabla_{w_{11}^3} e = \frac{\partial e}{\partial z_1^3} \frac{\partial z_1^3}{\partial w_{11}^3} = \frac{\partial e}{\partial z_1^3} a_1^2$.

GD/SGD for MLP: Sample-wise Gradient Computation

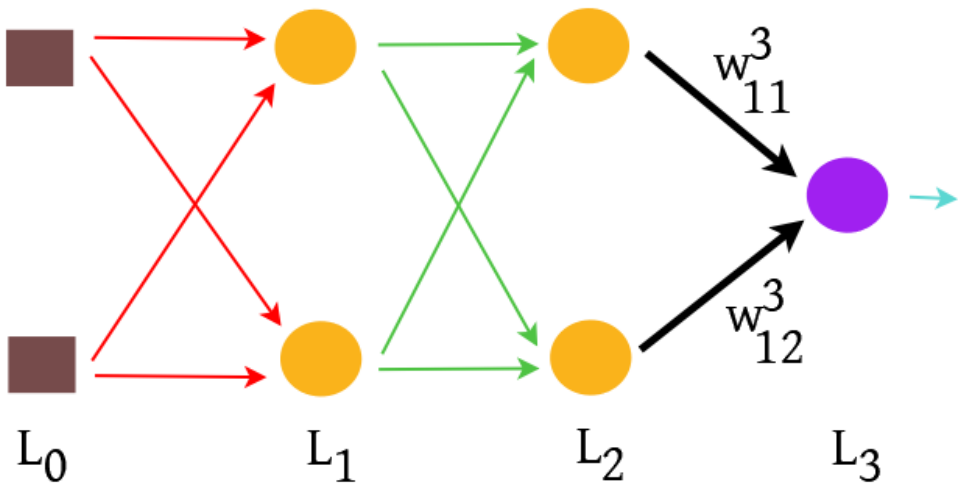

- Consider an arbitrary training sample $(x, y) \in D$.
- At layer L_3, $\hat{y} = a_1^3 = \phi\left(z_1^3\right) = \phi\left(w_{11}^3 a_1^2 + w_{12}^3 a_2^2\right)$.
- Sample-wise error: $e = (\hat{y} - y)^2$.
- **Note:** $\nabla_{w_{11}^3} e = \frac{\partial e}{\partial z_1^3} \frac{\partial z_1^3}{\partial w_{11}^3} = \frac{\partial e}{\partial a_1^3} \frac{\partial a_1^3}{\partial z_1^3} a_1^2$.

GD/SGD for MLP: Sample-wise Gradient Computation

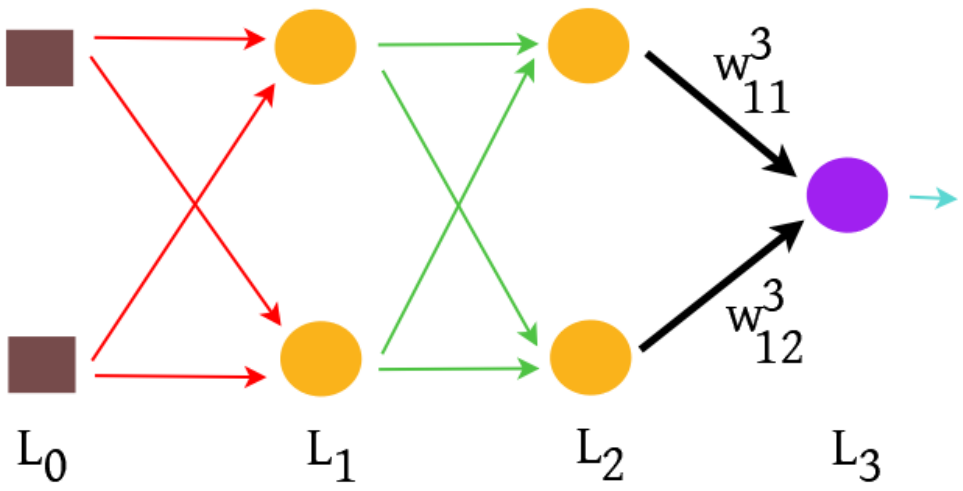

- Consider an arbitrary training sample $(x, y) \in D$.
- At layer L_3, $\hat{y} = a_1^3 = \phi\left(z_1^3\right) = \phi\left(w_{11}^3 a_1^2 + w_{12}^3 a_2^2\right)$.
- Sample-wise error: $e = (\hat{y} - y)^2$.
- **Note:** $\nabla_{w_{11}^3} e = \frac{\partial e}{\partial z_1^3} \frac{\partial z_1^3}{\partial w_{11}^3} = \frac{\partial e}{\partial a_1^3} \frac{\partial a_1^3}{\partial z_1^3} a_1^2 = \frac{\partial e}{\partial \hat{y}} \phi'(z_1^3) a_1^2$.

GD/SGD for MLP: Sample-wise Gradient Computation

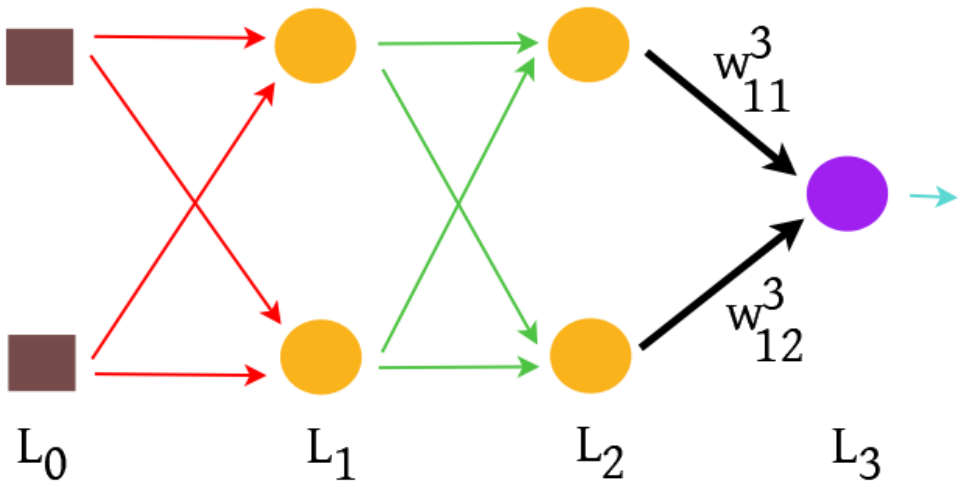

- Consider an arbitrary training sample $(x, y) \in D$.
- At layer L_3, $\hat{y} = a_1^3 = \phi\left(z_1^3\right) = \phi\left(w_{11}^3 a_1^2 + w_{12}^3 a_2^2\right)$.
- Sample-wise error: $e = (\hat{y} - y)^2$.
- **Note:** $\nabla_{w_{11}^3} e = \frac{\partial e}{\partial z_1^3} \frac{\partial z_1^3}{\partial w_{11}^3} = \frac{\partial e}{\partial a_1^3} \frac{\partial a_1^3}{\partial z_1^3} a_1^2 = \frac{\partial e}{\partial \hat{y}} \phi'(z_1^3) a_1^2$.
- Similarly, $\nabla_{w_{12}^3} e = \frac{\partial e}{\partial \hat{y}} \phi'(z_1^3) a_2^2$.

GD/SGD for MLP: Sample-wise Gradient Computation

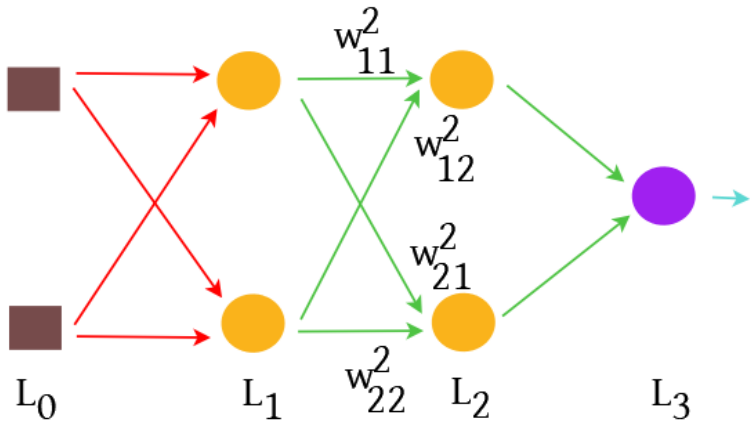

- We have at layer L_2: $a_1^2 = \phi\left(z_1^2\right) = \phi\left(w_{11}^2 a_1^1 + w_{12}^2 a_2^1\right)$.

GD/SGD for MLP: Sample-wise Gradient Computation

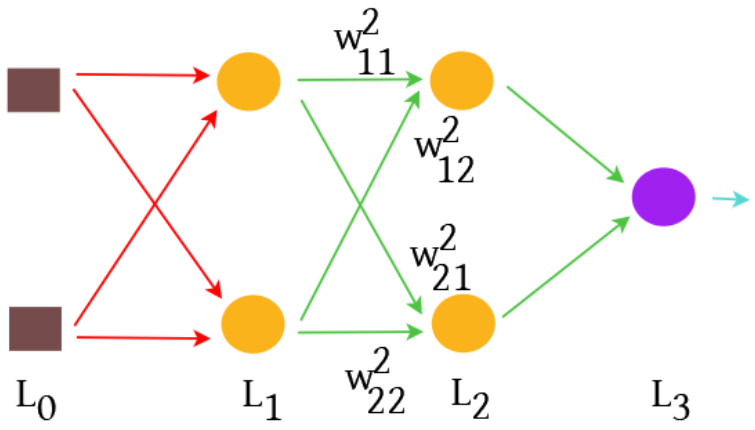

- We have at layer L_2: $a_1^2 = \phi\left(z_1^2\right) = \phi\left(w_{11}^2 a_1^1 + w_{12}^2 a_2^1\right)$.
- Hence, $\nabla_{w_{11}^2} e = \frac{\partial e}{\partial z_1^2} \frac{\partial z_1^2}{\partial w_{11}^2} = \frac{\partial e}{\partial z_1^2} a_1^1$.

GD/SGD for MLP: Sample-wise Gradient Computation

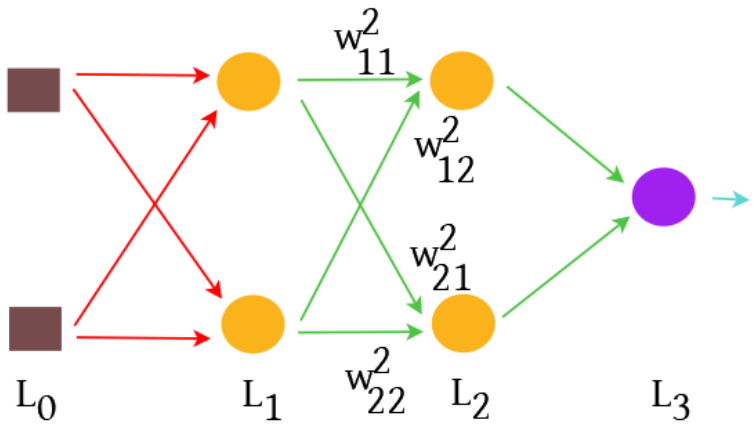

- We have at layer L_2: $a_1^2 = \phi\left(z_1^2\right) = \phi\left(w_{11}^2 a_1^1 + w_{12}^2 a_2^1\right)$.
- Hence, $\nabla_{w_{11}^2} e = \frac{\partial e}{\partial z_1^2} \frac{\partial z_1^2}{\partial w_{11}^2} = \frac{\partial e}{\partial z_1^2} a_1^1$.

GD/SGD for MLP: Sample-wise Gradient Computation

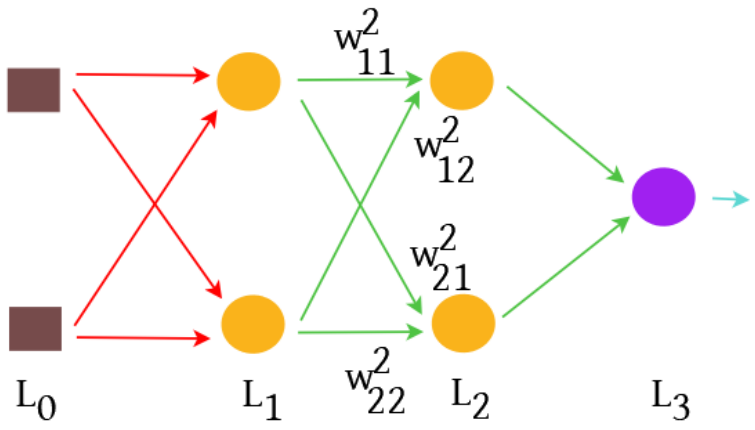

- We have at layer L_2: $a_1^2 = \phi\left(z_1^2\right) = \phi\left(w_{11}^2 a_1^1 + w_{12}^2 a_2^1\right)$.
- Hence, $\nabla_{w_{11}^2} e = \frac{\partial e}{\partial z_1^2}\frac{\partial z_1^2}{\partial w_{11}^2} = \frac{\partial e}{\partial z_1^2} a_1^1 = \frac{\partial e}{\partial a_1^2}\frac{\partial a_1^2}{\partial z_1^2} a_1^1 = \frac{\partial e}{\partial a_1^2}\phi'(z_1^2) a_1^1$.

GD/SGD for MLP: Sample-wise Gradient Computation

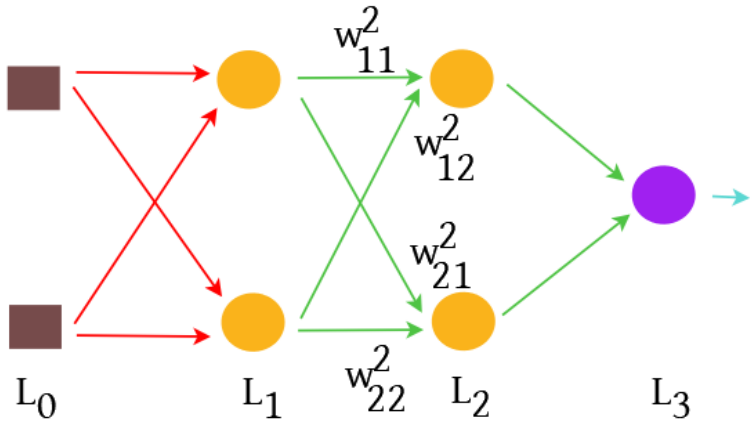

- We have at layer L_2: $a_1^2 = \phi\left(z_1^2\right) = \phi\left(w_{11}^2 a_1^1 + w_{12}^2 a_2^1\right)$.
- Hence, $\nabla_{w_{11}^2} e = \frac{\partial e}{\partial z_1^2}\frac{\partial z_1^2}{\partial w_{11}^2} = \frac{\partial e}{\partial z_1^2} a_1^1 = \frac{\partial e}{\partial a_1^2}\frac{\partial a_1^2}{\partial z_1^2} a_1^1 = \frac{\partial e}{\partial a_1^2}\phi'(z_1^2) a_1^1$.
- Now recall that $z_1^3 = \left(w_{11}^3 a_1^2 + w_{12}^3 a_2^2\right)$.

GD/SGD for MLP: Sample-wise Gradient Computation

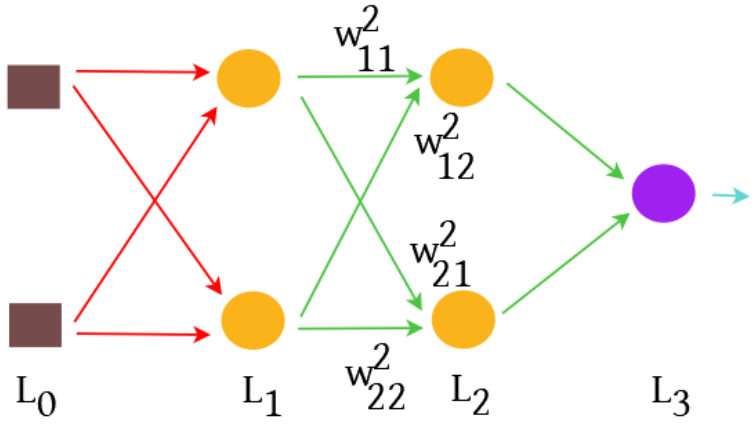

- We have at layer L_2: $a_1^2 = \phi\left(z_1^2\right) = \phi\left(w_{11}^2 a_1^1 + w_{12}^2 a_2^1\right)$.
- Hence, $\nabla_{w_{11}^2} e = \frac{\partial e}{\partial z_1^2}\frac{\partial z_1^2}{\partial w_{11}^2} = \frac{\partial e}{\partial z_1^2} a_1^1 = \frac{\partial e}{\partial a_1^2}\frac{\partial a_1^2}{\partial z_1^2} a_1^1 = \frac{\partial e}{\partial a_1^2}\phi'(z_1^2) a_1^1$.
- Now recall that $z_1^3 = \left(w_{11}^3 a_1^2 + w_{12}^3 a_2^2\right)$.
- Hence $\frac{\partial e}{\partial a_1^2} = \frac{\partial e}{\partial z_1^3}\frac{\partial z_1^3}{\partial a_1^2} = \frac{\partial e}{\partial z_1^3} w_{11}^3$.

GD/SGD for MLP: Sample-wise Gradient Computation

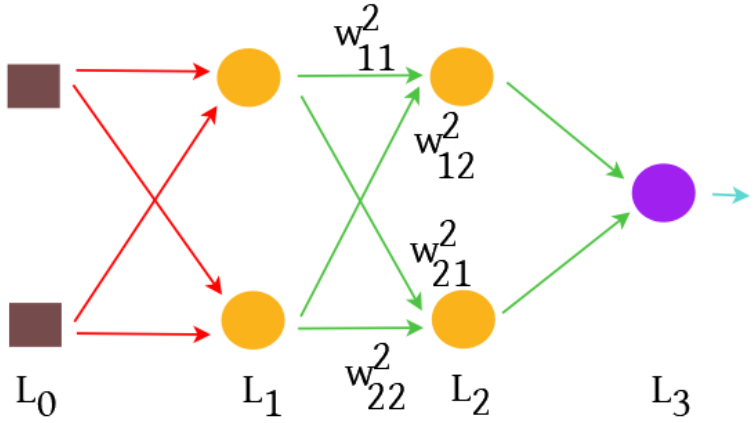

- We have at layer L_2: $a_1^2 = \phi\left(z_1^2\right) = \phi\left(w_{11}^2 a_1^1 + w_{12}^2 a_2^1\right)$.
- Hence, $\nabla_{w_{11}^2} e = \frac{\partial e}{\partial z_1^2}\frac{\partial z_1^2}{\partial w_{11}^2} = \frac{\partial e}{\partial z_1^2} a_1^1 = \frac{\partial e}{\partial a_1^2}\frac{\partial a_1^2}{\partial z_1^2} a_1^1 = \frac{\partial e}{\partial a_1^2}\phi'(z_1^2) a_1^1$.
- Now recall that $z_1^3 = \left(w_{11}^3 a_1^2 + w_{12}^3 a_2^2\right)$.
- Hence $\frac{\partial e}{\partial a_1^2} = \frac{\partial e}{\partial z_1^3}\frac{\partial z_1^3}{\partial a_1^2} = \frac{\partial e}{\partial z_1^3} w_{11}^3$.
- Recall: We have already computed $\frac{\partial e}{\partial z_1^3} = \frac{\partial e}{\partial \hat{y}}\phi'(z_1^3)$.

GD/SGD for MLP: Sample-wise Gradient Computation

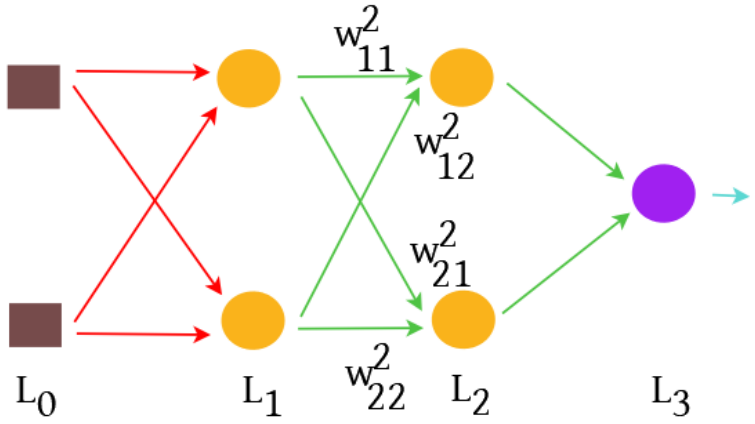

- We have at layer L_2: $a_1^2 = \phi\left(z_1^2\right) = \phi\left(w_{11}^2 a_1^1 + w_{12}^2 a_2^1\right)$.
- Hence, $\nabla_{w_{11}^2} e = \frac{\partial e}{\partial z_1^2}\frac{\partial z_1^2}{\partial w_{11}^2} = \frac{\partial e}{\partial z_1^2} a_1^1 = \frac{\partial e}{\partial a_1^2}\frac{\partial a_1^2}{\partial z_1^2} a_1^1 = \frac{\partial e}{\partial a_1^2}\phi'(z_1^2) a_1^1$.
- Now recall that $z_1^3 = \left(w_{11}^3 a_1^2 + w_{12}^3 a_2^2\right)$.
- Hence $\frac{\partial e}{\partial a_1^2} = \frac{\partial e}{\partial z_1^3}\frac{\partial z_1^3}{\partial a_1^2} = \frac{\partial e}{\partial z_1^3} w_{11}^3 = \frac{\partial e}{\partial \hat{y}}\phi'(z_1^3) w_{11}^3$.

GD/SGD for MLP: Sample-wise Gradient Computation

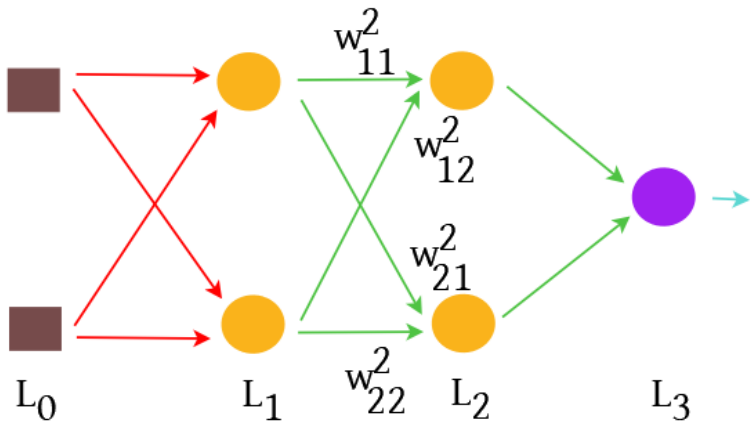

- We have at layer L_2: $a_1^2 = \phi\left(z_1^2\right) = \phi\left(w_{11}^2 a_1^1 + w_{12}^2 a_2^1\right)$.
- Hence, $\nabla_{w_{11}^2} e = \frac{\partial e}{\partial z_1^2}\frac{\partial z_1^2}{\partial w_{11}^2} = \frac{\partial e}{\partial z_1^2} a_1^1 = \frac{\partial e}{\partial a_1^2}\frac{\partial a_1^2}{\partial z_1^2} a_1^1 = \frac{\partial e}{\partial a_1^2}\phi'(z_1^2) a_1^1$.
- Now recall that $z_1^3 = \left(w_{11}^3 a_1^2 + w_{12}^3 a_2^2\right)$.
- Hence $\frac{\partial e}{\partial a_1^2} = \frac{\partial e}{\partial z_1^3}\frac{\partial z_1^3}{\partial a_1^2} = \frac{\partial e}{\partial z_1^3} w_{11}^3 = \frac{\partial e}{\partial \hat{y}}\phi'(z_1^3) w_{11}^3$.
- Combining, we have $\nabla_{w_{11}^2} e = \frac{\partial e}{\partial \hat{y}}\phi'(z_1^3) w_{11}^3 \phi'(z_1^2) a_1^1$.

GD/SGD for MLP: Sample-wise Gradient Computation

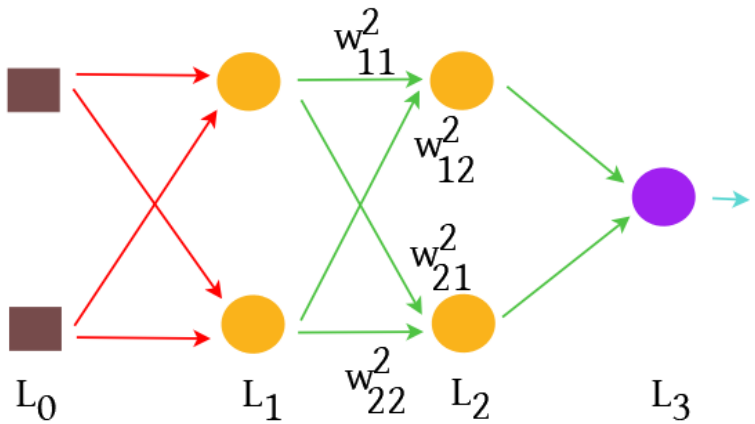

- Thus, $\nabla_{w^2_{11}} e = \frac{\partial e}{\partial \hat{y}} \phi'(z^3_1) w^3_{11} \phi'(z^2_1) a^1_1$.
- Similarly, $\nabla_{w^2_{12}} e = \frac{\partial e}{\partial \hat{y}} \phi'(z^3_1) w^3_{11} \phi'(z^2_1) a^1_2$.

GD/SGD for MLP: Sample-wise Gradient Computation

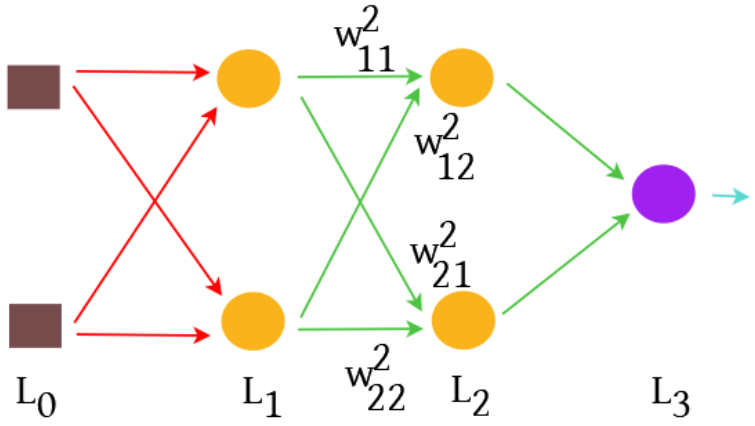

- Also, we have at layer L_2: $a_2^2 = \phi\left(z_2^2\right) = \phi\left(w_{21}^2 a_1^1 + w_{22}^2 a_2^1\right)$.
- Hence, $\nabla_{w_{21}^2} e = ?$, $\nabla_{w_{22}^2} e = ?$

GD/SGD for MLP: Sample-wise Gradient Computation

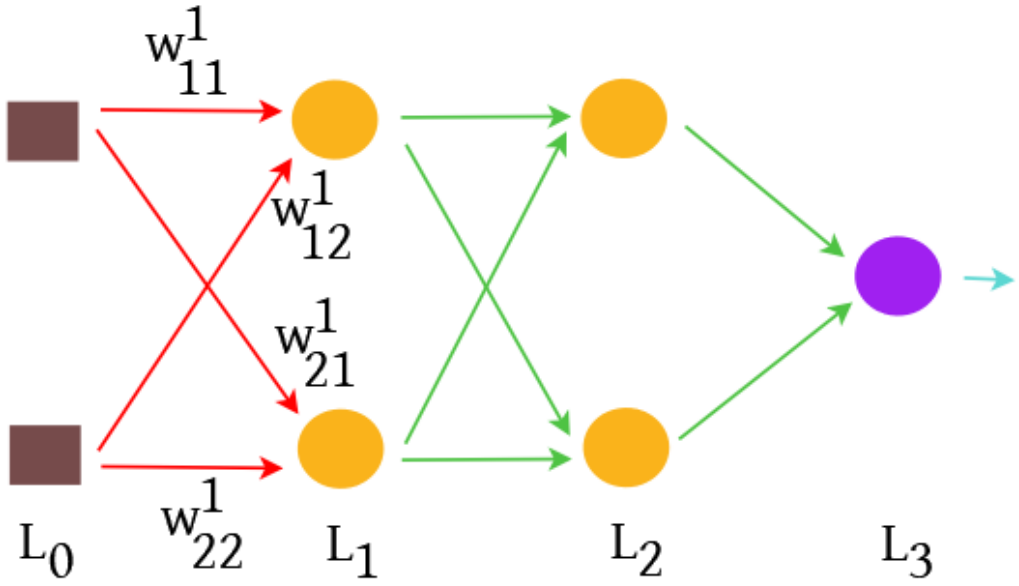

- We have at layer L_1: $a^1_1 = \phi\left(z^1_1\right) = \phi\left(w^1_{11}x_1 + w^1_{12}x_2\right)$.

GD/SGD for MLP: Sample-wise Gradient Computation

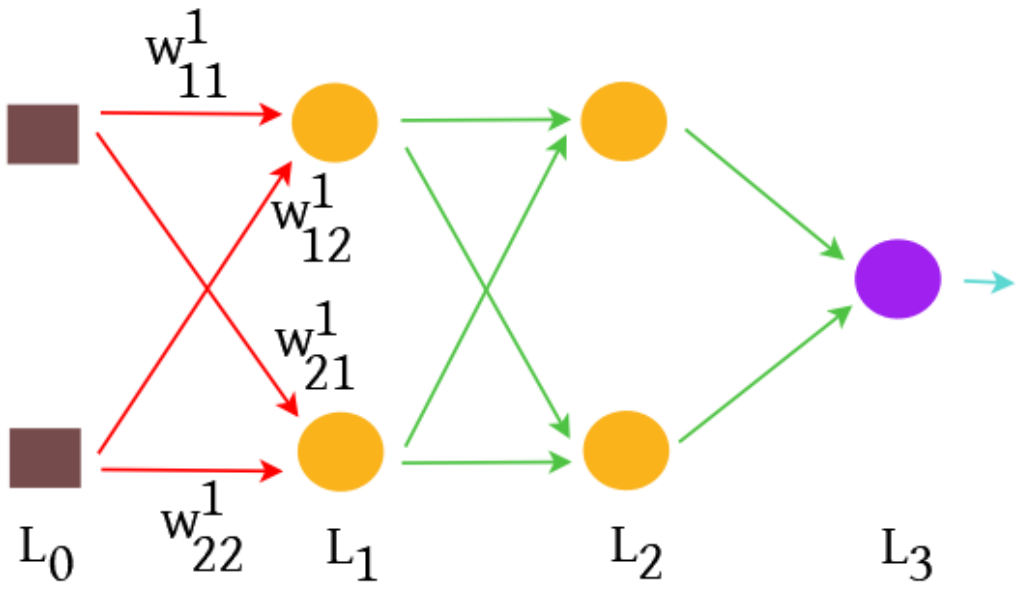

- We have at layer L_1: $a^1_1 = \phi\left(z^1_1\right) = \phi\left(w^1_{11}x_1 + w^1_{12}x_2\right)$.
- **Note:** $\nabla_{w^1_{11}} e = \frac{\partial e}{\partial z^1_1}\frac{\partial z^1_1}{\partial w^1_{11}} = \frac{\partial e}{\partial z^1_1}x_1$.

GD/SGD for MLP: Sample-wise Gradient Computation

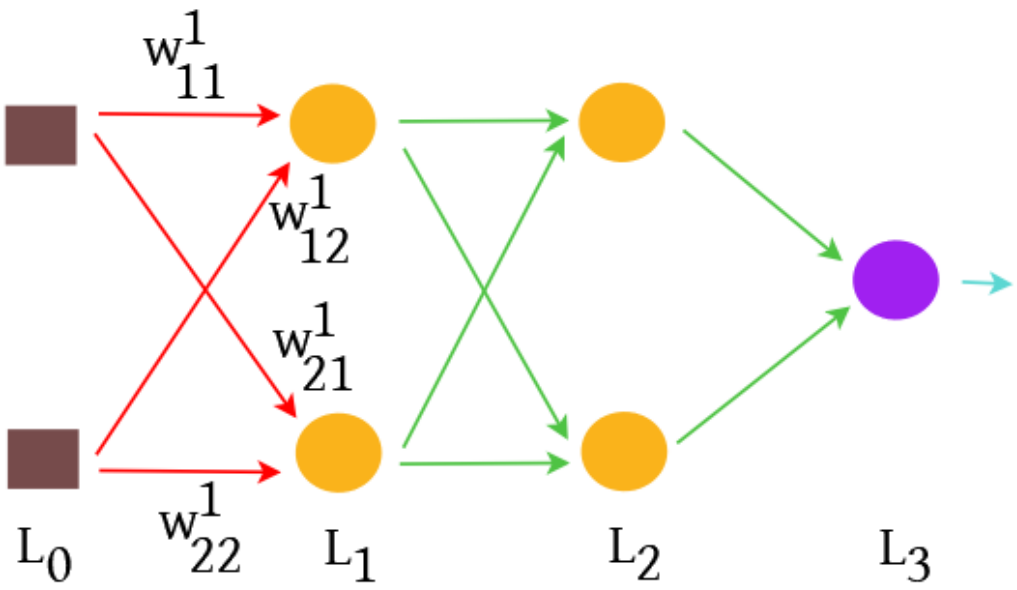

- We have at layer L_1: $a_1^1 = \phi\left(z_1^1\right) = \phi\left(w_{11}^1 x_1 + w_{12}^1 x_2\right)$.
- **Note:** $\nabla_{w_{11}^1} e = \frac{\partial e}{\partial z_1^1} x_1 = \frac{\partial e}{\partial a_1^1} \phi'(z_1^1) x_1$.

GD/SGD for MLP: Sample-wise Gradient Computation

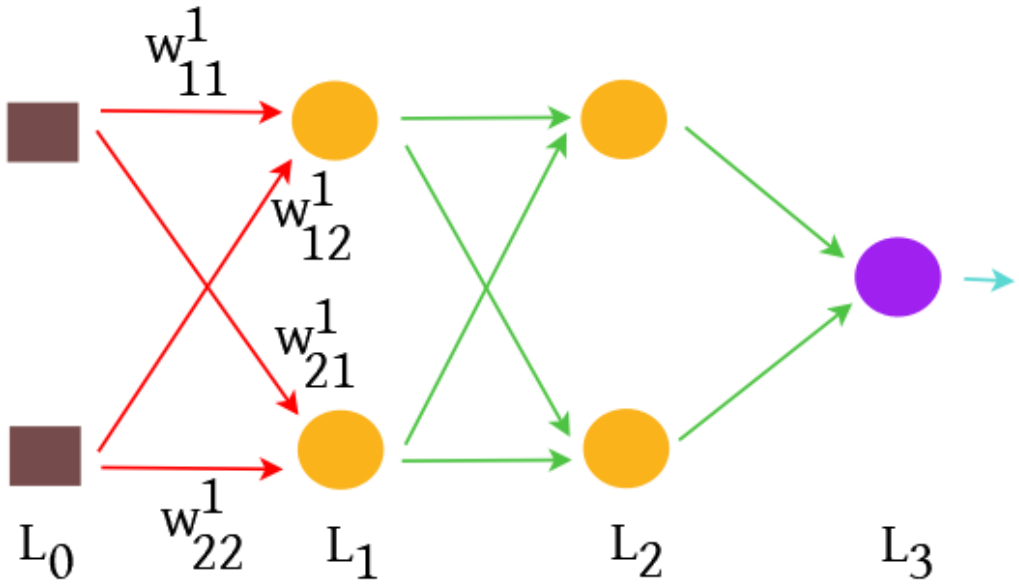

- We have at layer L_1: $a_1^1 = \phi\left(z_1^1\right) = \phi\left(w_{11}^1 x_1 + w_{12}^1 x_2\right)$.
- **Note:** $\nabla_{w_{11}^1} e = \frac{\partial e}{\partial z_1^1} x_1 = \frac{\partial e}{\partial a_1^1} \phi'(z_1^1) x_1$.
- Now we see that a_1^1 contributes to both z_1^2 and z_2^2.

GD/SGD for MLP: Sample-wise Gradient Computation

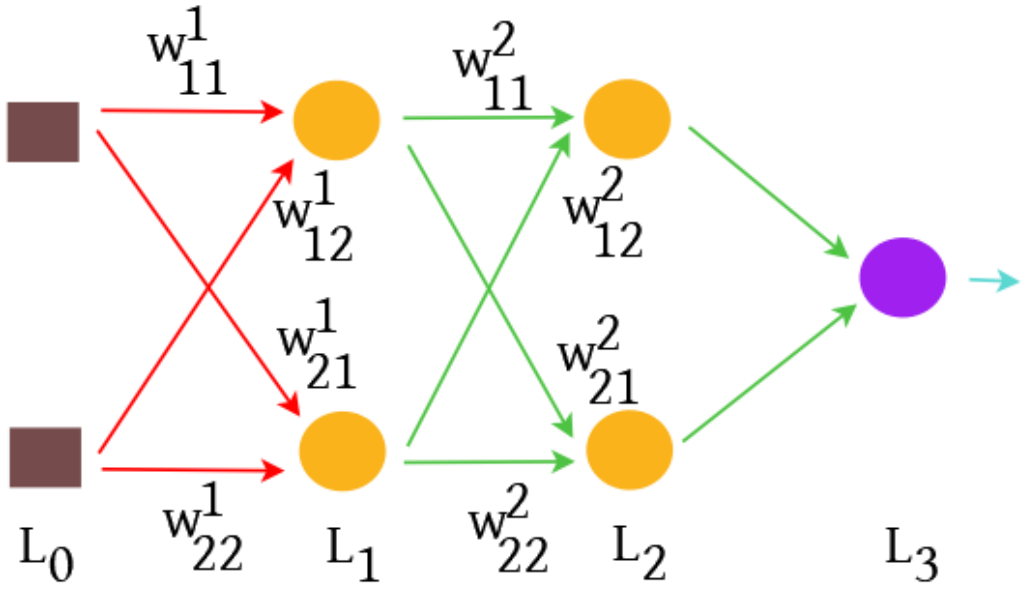

- We have at layer L_1: $a^1_1 = \phi\left(z^1_1\right) = \phi\left(w^1_{11}x_1 + w^1_{12}x_2\right)$.
- **Note:** $\nabla_{w^1_{11}} e = \frac{\partial e}{\partial z^1_1} x_1 = \frac{\partial e}{\partial a^1_1} \phi'(z^1_1) x_1$.
- Now we see that a^1_1 contributes to both z^2_1 and z^2_2.
- **Recall:** $z^2_1 = w^2_{11} a^1_1 + w^2_{12} a^1_2$ and $z^2_2 = w^2_{21} a^1_1 + w^2_{22} a^1_2$.

GD/SGD for MLP: Sample-wise Gradient Computation

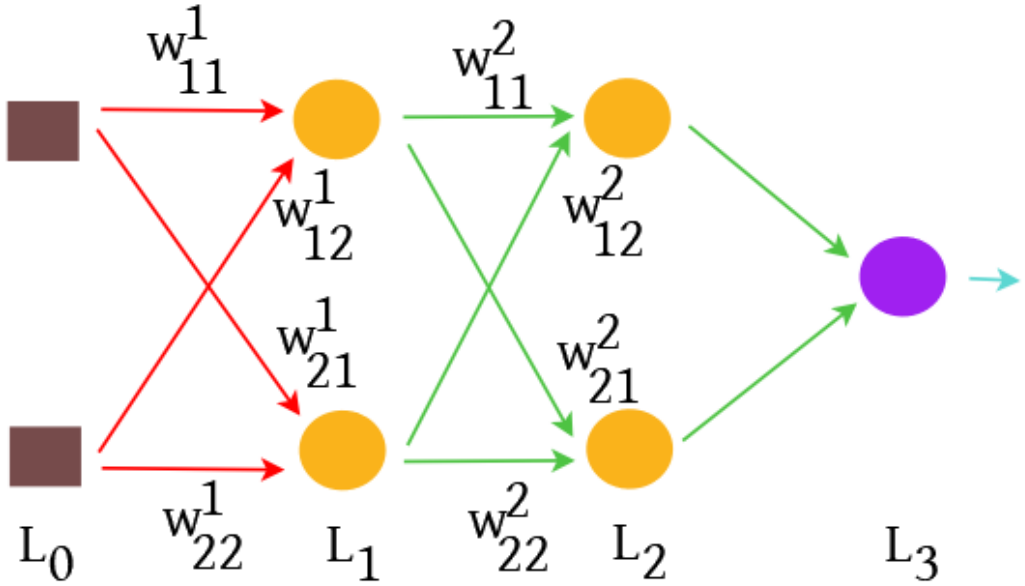

- We have at layer L_1: $a^1_1 = \phi\left(z^1_1\right) = \phi\left(w^1_{11}x_1 + w^1_{12}x_2\right)$.
- **Note:** $\nabla_{w^1_{11}} e = \frac{\partial e}{\partial z^1_1} x_1 = \frac{\partial e}{\partial a^1_1} \phi'(z^1_1) x_1$.
- Now we see that a^1_1 contributes to both z^2_1 and z^2_2.
- **Recall:** $z^2_1 = w^2_{11} a^1_1 + w^2_{12} a^1_2$ and $z^2_2 = w^2_{21} a^1_1 + w^2_{22} a^1_2$.
- Hence $\frac{\partial e}{\partial a^1_1} = \sum_{i=1}^{2} \frac{\partial e}{\partial z^2_i} \frac{\partial z^2_i}{\partial a^1_1}$.

GD/SGD for MLP: Sample-wise Gradient Computation

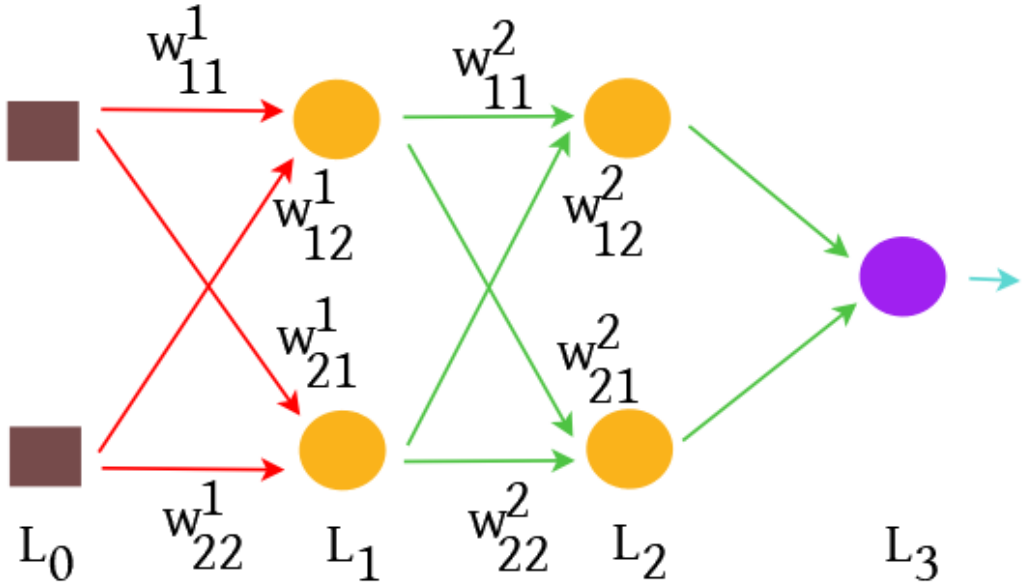

- We have at layer L_1: $a^1_1 = \phi\left(z^1_1\right) = \phi\left(w^1_{11}x_1 + w^1_{12}x_2\right)$.
- **Note:** $\nabla_{w^1_{11}} e = \frac{\partial e}{\partial z^1_1} x_1 = \frac{\partial e}{\partial a^1_1} \phi'(z^1_1) x_1$.
- Now we see that a^1_1 contributes to both z^2_1 and z^2_2.
- **Recall:** $z^2_1 = w^2_{11} a^1_1 + w^2_{12} a^1_2$ and $z^2_2 = w^2_{21} a^1_1 + w^2_{22} a^1_2$.
- Hence $\frac{\partial e}{\partial a^1_1} = \sum_{i=1}^{2} \frac{\partial e}{\partial z^2_i} \frac{\partial z^2_i}{\partial a^1_1} = \sum_{i=1}^{2} \frac{\partial e}{\partial z^2_i} w^2_{i1}$.

GD/SGD for MLP: Sample-wise Gradient Computation

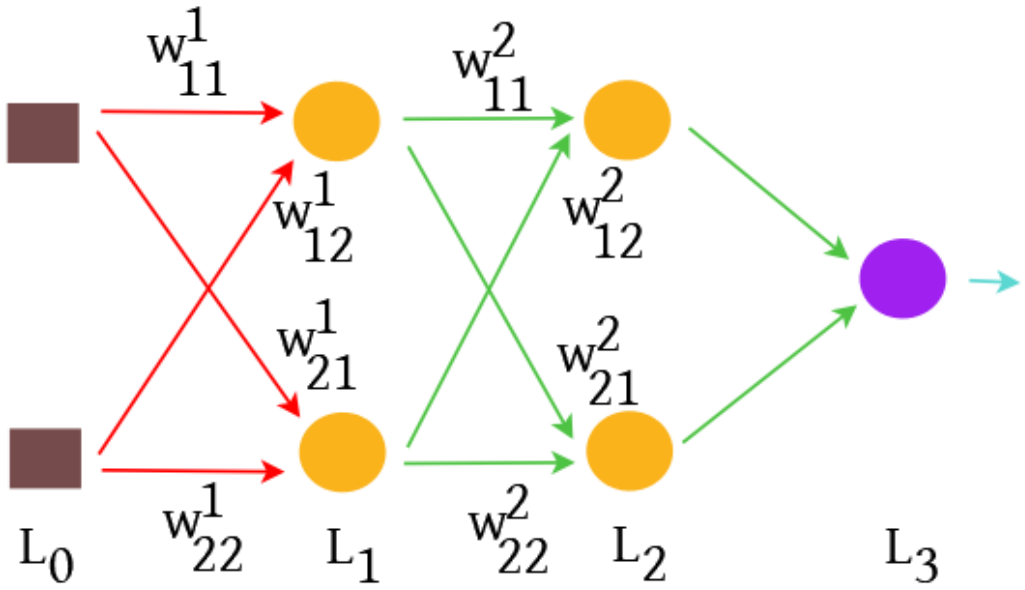

- We have at layer L_1: $a^1_1 = \phi\left(z^1_1\right) = \phi\left(w^1_{11}x_1 + w^1_{12}x_2\right)$.
- **Note:** $\nabla_{w^1_{11}} e = \frac{\partial e}{\partial z^1_1} x_1 = \frac{\partial e}{\partial a^1_1} \phi'(z^1_1) x_1$.
- Now we see that a^1_1 contributes to both z^2_1 and z^2_2.
- **Recall:** $z^2_1 = w^2_{11}a^1_1 + w^2_{12}a^1_2$ and $z^2_2 = w^2_{21}a^1_1 + w^2_{22}a^1_2$.
- Hence $\frac{\partial e}{\partial a^1_1} = \sum_{i=1}^{2} \frac{\partial e}{\partial z^2_i} \frac{\partial z^2_i}{\partial a^1_1} = \sum_{i=1}^{2} \frac{\partial e}{\partial z^2_i} w^2_{i1}$.
- Recall: We have already computed $\frac{\partial e}{\partial z^2_i}, i = 1, 2$.

GD/SGD for MLP: Sample-wise Gradient Computation

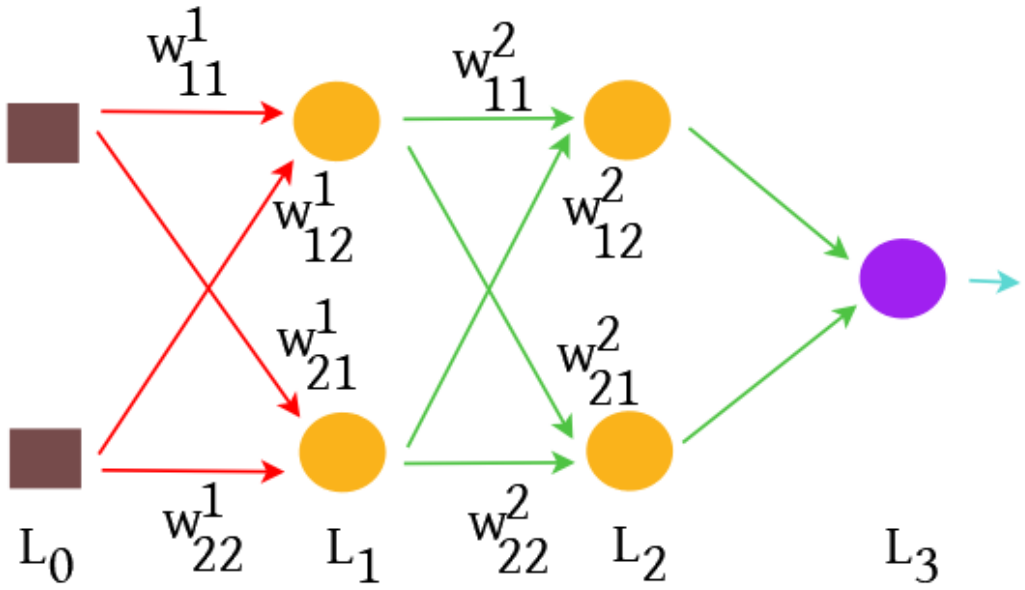

- We have at layer L_1: $a^1_1 = \phi\left(z^1_1\right) = \phi\left(w^1_{11}x_1 + w^1_{12}x_2\right)$.
- **Note:** $\nabla_{w^1_{11}} e = \frac{\partial e}{\partial z^1_1} x_1 = \frac{\partial e}{\partial a^1_1} \phi'(z^1_1) x_1$.
- Now we see that a^1_1 contributes to both z^2_1 and z^2_2.
- **Recall:** $z^2_1 = w^2_{11}a^1_1 + w^2_{12}a^1_2$ and $z^2_2 = w^2_{21}a^1_1 + w^2_{22}a^1_2$.
- Hence $\frac{\partial e}{\partial a^1_1} = \sum_{i=1}^{2} \frac{\partial e}{\partial z^2_i} \frac{\partial z^2_i}{\partial a^1_1} = \sum_{i=1}^{2} \frac{\partial e}{\partial z^2_i} w^2_{i1}$.
- Recall: We have already computed $\frac{\partial e}{\partial z^2_i} = \frac{\partial e}{\partial a^2_i} \phi'(z^2_i), i = 1, 2$.

GD/SGD for MLP: Sample-wise Gradient Computation

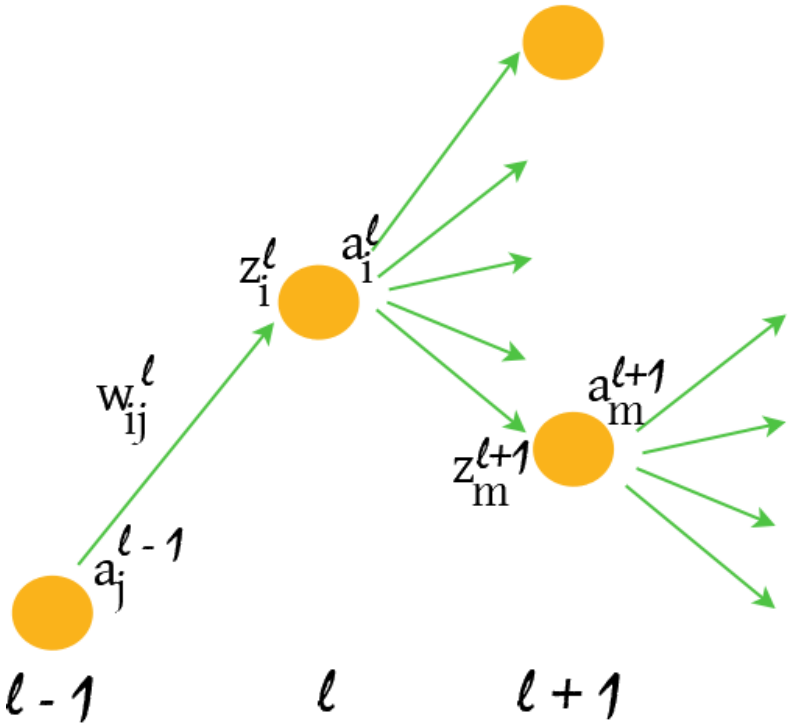

Generalized setting:

$$\frac{\partial e}{\partial w_{ij}^\ell} = \frac{\partial e}{\partial z_i^\ell} a_j^{\ell-1}$$

GD/SGD for MLP: Sample-wise Gradient Computation

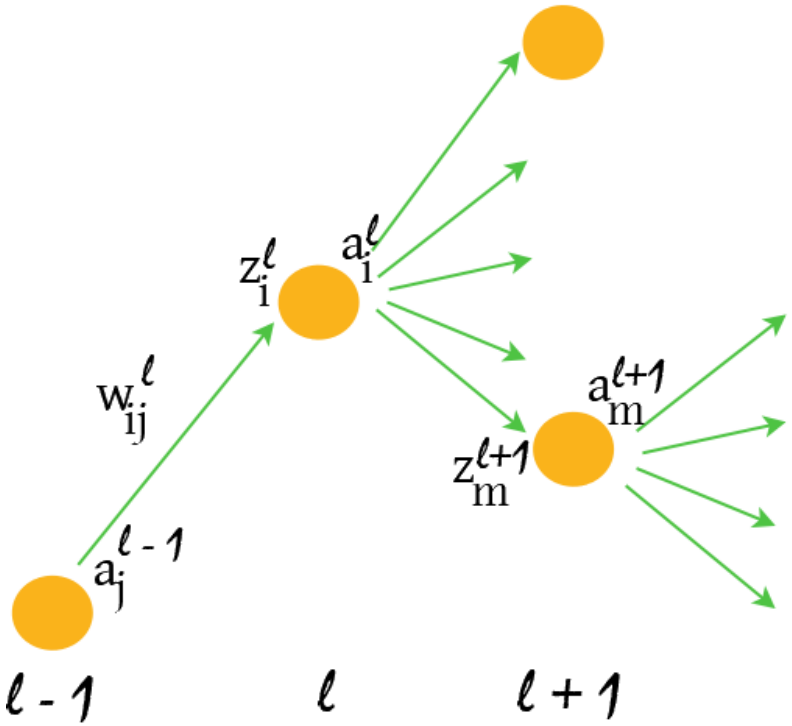

Generalized setting:

$$\frac{\partial e}{\partial w_{ij}^\ell} = \frac{\partial e}{\partial z_i^\ell} a_j^{\ell-1}$$

$$\frac{\partial e}{\partial z_i^\ell} = \frac{\partial e}{\partial a_i^\ell} \phi'(z_i^\ell)$$

GD/SGD for MLP: Sample-wise Gradient Computation

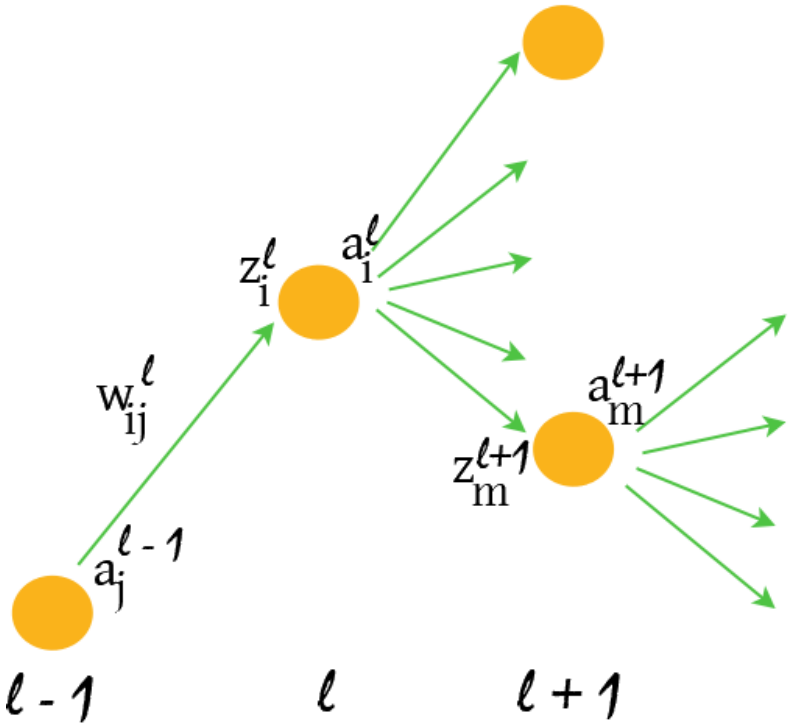

Generalized setting:

$$\frac{\partial e}{\partial w_{ij}^\ell} = \frac{\partial e}{\partial z_i^\ell} a_j^{\ell-1}$$

$$\frac{\partial e}{\partial z_i^\ell} = \frac{\partial e}{\partial a_i^\ell} \phi'(z_i^\ell)$$

$$\frac{\partial e}{\partial a_i^\ell} = \sum_{m=1}^{N_{\ell+1}} \frac{\partial e}{\partial z_m^{\ell+1}} w_{mi}^{\ell+1}$$

GD/SGD for MLP: Sample-wise Gradient Computation

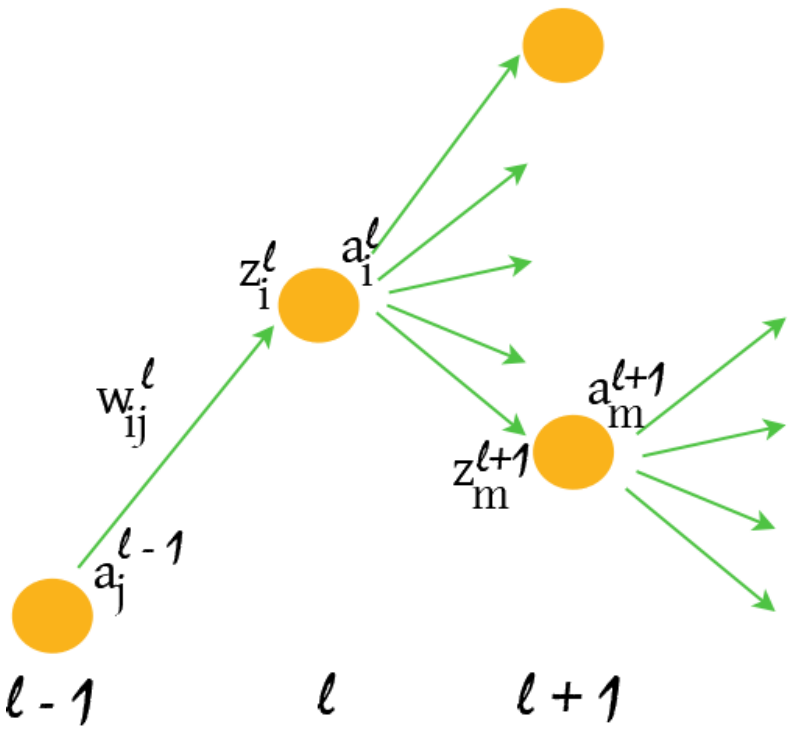

Generalized setting:

$$\frac{\partial e}{\partial w_{ij}^\ell} = \frac{\partial e}{\partial z_i^\ell} a_j^{\ell-1}$$

$$\frac{\partial e}{\partial z_i^\ell} = \frac{\partial e}{\partial a_i^\ell} \phi'(z_i^\ell)$$

$$\frac{\partial e}{\partial a_i^\ell} = \sum_{m=1}^{N_{\ell+1}} \frac{\partial e}{\partial z_m^{\ell+1}} w_{mi}^{\ell+1}$$

$$= \sum_{m=1}^{N_{\ell+1}} \frac{\partial e}{\partial a_m^{\ell+1}} \phi'(z_m^{\ell+1}) w_{mi}^{\ell+1}$$

GD/SGD for MLP: Sample-wise Gradient Computation

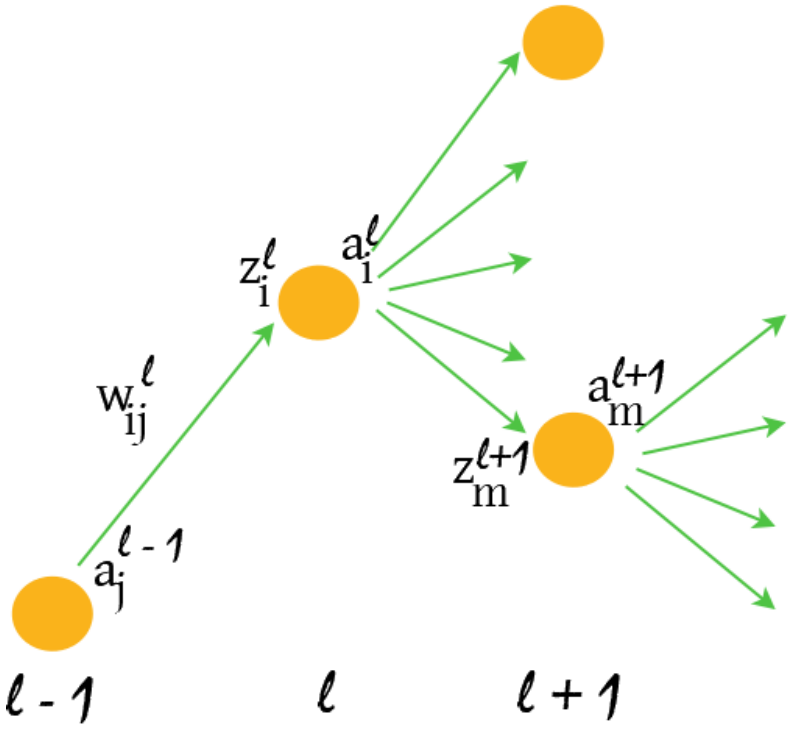

Generalized setting:

$$\frac{\partial e}{\partial w_{ij}^\ell} = \frac{\partial e}{\partial z_i^\ell} a_j^{\ell-1}$$

$$\frac{\partial e}{\partial z_i^\ell} = \frac{\partial e}{\partial a_i^\ell} \phi'(z_i^\ell)$$

$$\frac{\partial e}{\partial a_i^\ell} = \sum_{m=1}^{N_{\ell+1}} \frac{\partial e}{\partial z_m^{\ell+1}} w_{mi}^{\ell+1}$$

$$= \sum_{m=1}^{N_{\ell+1}} \frac{\partial e}{\partial a_m^{\ell+1}} \phi'(z_m^{\ell+1}) w_{mi}^{\ell+1}$$

$$= \left[\phi'(z_1^{\ell+1}) w_{11}^{\ell+1} \ldots \phi'(z_{N_{\ell+1}}^{\ell+1}) w_{N_{\ell+1}1}^{\ell+1}\right] \begin{bmatrix} \frac{\partial e}{\partial a_1^{\ell+1}} \\ \vdots \\ \frac{\partial e}{\partial a_{N_{\ell+1}}^{\ell+1}} \end{bmatrix}$$

GD/SGD for MLP: Sample-wise Gradient Computation

Generalized setting:

$$\frac{\partial e}{\partial w_{ij}^{\ell}} = \frac{\partial e}{\partial z_i^{\ell}} a_j^{\ell-1}$$

$$\frac{\partial e}{\partial z_i^{\ell}} = \frac{\partial e}{\partial a_i^{\ell}} \phi'(z_i^{\ell})$$

$$\begin{bmatrix} \frac{\partial e}{\partial a_1^{\ell}} \\ \vdots \\ \frac{\partial e}{\partial a_{N_\ell}^{\ell}} \end{bmatrix} = \begin{bmatrix} \phi'(z_1^{\ell+1}) w_{11}^{\ell+1} & \dots & \phi'(z_{N_{\ell+1}}^{\ell+1}) w_{N_{\ell+1}1}^{\ell+1} \\ \vdots & \dots & \vdots \\ \phi'(z_1^{\ell+1}) w_{1N_\ell}^{\ell+1} & \dots & \phi'(z_{N_{\ell+1}}^{\ell+1}) w_{N_{\ell+1}N_\ell}^{\ell+1} \end{bmatrix} \begin{bmatrix} \frac{\partial e}{\partial a_1^{\ell+1}} \\ \vdots \\ \frac{\partial e}{\partial a_{N_{\ell+1}}^{\ell+1}} \end{bmatrix}$$

GD/SGD for MLP: Sample-wise Gradient Computation

Generalized setting:

$$\frac{\partial e}{\partial w_{ij}^{\ell}} = \frac{\partial e}{\partial z_i^{\ell}} a_j^{\ell-1}$$

$$\frac{\partial e}{\partial z_i^{\ell}} = \frac{\partial e}{\partial a_i^{\ell}} \phi'(z_i^{\ell})$$

$$\begin{bmatrix} \frac{\partial e}{\partial a_1^{\ell}} \\ \vdots \\ \frac{\partial e}{\partial a_{N_\ell}^{\ell}} \end{bmatrix} = \begin{bmatrix} \phi'(z_1^{\ell+1}) w_{11}^{\ell+1} & \dots & \phi'(z_{N_{\ell+1}}^{\ell+1}) w_{N_{\ell+1}1}^{\ell+1} \\ \vdots & \dots & \vdots \\ \phi'(z_1^{\ell+1}) w_{1N_\ell}^{\ell+1} & \dots & \phi'(z_{N_{\ell+1}}^{\ell+1}) w_{N_{\ell+1}N_\ell}^{\ell+1} \end{bmatrix} \begin{bmatrix} \frac{\partial e}{\partial a_1^{\ell+1}} \\ \vdots \\ \frac{\partial e}{\partial a_{N_{\ell+1}}^{\ell+1}} \end{bmatrix}$$

$$\Longrightarrow \begin{bmatrix} \frac{\partial e}{\partial a_1^{\ell}} \\ \vdots \\ \frac{\partial e}{\partial a_{N_\ell}^{\ell}} \end{bmatrix} = \begin{bmatrix} w_{11}^{\ell+1} & \dots & w_{N_{\ell+1}1}^{\ell+1} \\ \vdots & \dots & \vdots \\ w_{1N_\ell}^{\ell+1} & \dots & w_{N_{\ell+1}N_\ell}^{\ell+1} \end{bmatrix} \begin{bmatrix} \phi'(z_1^{\ell+1}) & & \\ & \ddots & \\ & & \phi'(z_{N_{\ell+1}}^{\ell+1}) \end{bmatrix} \begin{bmatrix} \frac{\partial e}{\partial a_1^{\ell+1}} \\ \vdots \\ \frac{\partial e}{\partial a_{N_{\ell+1}}^{\ell+1}} \end{bmatrix}$$

GD/SGD for MLP: Sample-wise Gradient Computation

Generalized setting:

$$\frac{\partial e}{\partial w_{ij}^{\ell}} = \frac{\partial e}{\partial z_i^{\ell}} a_j^{\ell-1}$$

$$\frac{\partial e}{\partial z_i^{\ell}} = \frac{\partial e}{\partial a_i^{\ell}} \phi'(z_i^{\ell})$$

$$\begin{bmatrix} \frac{\partial e}{\partial a_1^{\ell}} \\ \vdots \\ \frac{\partial e}{\partial a_{N_\ell}^{\ell}} \end{bmatrix} = \begin{bmatrix} \phi'(z_1^{\ell+1}) w_{11}^{\ell+1} & \dots & \phi'(z_{N_{\ell+1}}^{\ell+1}) w_{N_{\ell+1}1}^{\ell+1} \\ \vdots & \dots & \vdots \\ \phi'(z_1^{\ell+1}) w_{1N_\ell}^{\ell+1} & \dots & \phi'(z_{N_{\ell+1}}^{\ell+1}) w_{N_{\ell+1}N_\ell}^{\ell+1} \end{bmatrix} \begin{bmatrix} \frac{\partial e}{\partial a_1^{\ell+1}} \\ \vdots \\ \frac{\partial e}{\partial a_{N_{\ell+1}}^{\ell+1}} \end{bmatrix}$$

$$\Longrightarrow \begin{bmatrix} \frac{\partial e}{\partial a_1^{\ell}} \\ \vdots \\ \frac{\partial e}{\partial a_{N_\ell}^{\ell}} \end{bmatrix} = \begin{bmatrix} w_{11}^{\ell+1} & \dots & w_{N_{\ell+1}1}^{\ell+1} \\ \vdots & \dots & \vdots \\ w_{1N_\ell}^{\ell+1} & \dots & w_{N_{\ell+1}N_\ell}^{\ell+1} \end{bmatrix} \begin{bmatrix} \phi'(z_1^{\ell+1}) & & \\ & \ddots & \\ & & \phi'(z_{N_{\ell+1}}^{\ell+1}) \end{bmatrix} \begin{bmatrix} \frac{\partial e}{\partial a_1^{\ell+1}} \\ \vdots \\ \frac{\partial e}{\partial a_{N_{\ell+1}}^{\ell+1}} \end{bmatrix}$$

$$\delta^{\ell} = (W^{\ell+1})^{\top} \mathrm{Diag}(\phi^{\ell+1'}) \delta^{\ell+1}$$

GD/SGD for MLP: Sample-wise Gradient Computation

Generalized setting:

$$\frac{\partial e}{\partial w_{ij}^{\ell}} = \frac{\partial e}{\partial z_i^{\ell}} a_j^{\ell-1}$$

$$\frac{\partial e}{\partial z_i^{\ell}} = \frac{\partial e}{\partial a_i^{\ell}} \phi'(z_i^{\ell})$$

$$\begin{bmatrix} \frac{\partial e}{\partial a_1^{\ell}} \\ \vdots \\ \frac{\partial e}{\partial a_{N_\ell}^{\ell}} \end{bmatrix} = \begin{bmatrix} \phi'(z_1^{\ell+1}) w_{11}^{\ell+1} & \dots & \phi'(z_{N_{\ell+1}}^{\ell+1}) w_{N_{\ell+1}1}^{\ell+1} \\ \vdots & \dots & \vdots \\ \phi'(z_1^{\ell+1}) w_{1N_\ell}^{\ell+1} & \dots & \phi'(z_{N_{\ell+1}}^{\ell+1}) w_{N_{\ell+1}N_\ell}^{\ell+1} \end{bmatrix} \begin{bmatrix} \frac{\partial e}{\partial a_1^{\ell+1}} \\ \vdots \\ \frac{\partial e}{\partial a_{N_{\ell+1}}^{\ell+1}} \end{bmatrix}$$

$$\implies \begin{bmatrix} \frac{\partial e}{\partial a_1^{\ell}} \\ \vdots \\ \frac{\partial e}{\partial a_{N_\ell}^{\ell}} \end{bmatrix} = \begin{bmatrix} w_{11}^{\ell+1} & \dots & w_{N_{\ell+1}1}^{\ell+1} \\ \vdots & \dots & \vdots \\ w_{1N_\ell}^{\ell+1} & \dots & w_{N_{\ell+1}N_\ell}^{\ell+1} \end{bmatrix} \begin{bmatrix} \phi'(z_1^{\ell+1}) & & \\ & \ddots & \\ & & \phi'(z_{N_{\ell+1}}^{\ell+1}) \end{bmatrix} \begin{bmatrix} \frac{\partial e}{\partial a_1^{\ell+1}} \\ \vdots \\ \frac{\partial e}{\partial a_{N_{\ell+1}}^{\ell+1}} \end{bmatrix}$$

$$\delta^{\ell} = (W^{\ell+1})^{\top} \mathrm{Diag}(\phi^{\ell+1'}) \delta^{\ell+1} = V^{\ell+1} \delta^{\ell+1}$$

GD/SGD for MLP: Sample-wise Gradient Computation

Generalized setting:

$$\frac{\partial e}{\partial w_{ij}^{\ell}} = \frac{\partial e}{\partial z_i^{\ell}} a_j^{\ell-1}$$

$$\frac{\partial e}{\partial z_i^{\ell}} = \frac{\partial e}{\partial a_i^{\ell}} \phi'(z_i^{\ell})$$

$$\begin{bmatrix} \frac{\partial e}{\partial a_1^{\ell}} \\ \vdots \\ \frac{\partial e}{\partial a_{N_\ell}^{\ell}} \end{bmatrix} = \begin{bmatrix} \phi'(z_1^{\ell+1}) w_{11}^{\ell+1} & \dots & \phi'(z_{N_{\ell+1}}^{\ell+1}) w_{N_{\ell+1}1}^{\ell+1} \\ \vdots & \dots & \vdots \\ \phi'(z_1^{\ell+1}) w_{1N_\ell}^{\ell+1} & \dots & \phi'(z_{N_{\ell+1}}^{\ell+1}) w_{N_{\ell+1}N_\ell}^{\ell+1} \end{bmatrix} \begin{bmatrix} \frac{\partial e}{\partial a_1^{\ell+1}} \\ \vdots \\ \frac{\partial e}{\partial a_{N_{\ell+1}}^{\ell+1}} \end{bmatrix}$$

$$\Longrightarrow \begin{bmatrix} \frac{\partial e}{\partial a_1^{\ell}} \\ \vdots \\ \frac{\partial e}{\partial a_{N_\ell}^{\ell}} \end{bmatrix} = \begin{bmatrix} w_{11}^{\ell+1} & \dots & w_{N_{\ell+1}1}^{\ell+1} \\ \vdots & \dots & \vdots \\ w_{1N_\ell}^{\ell+1} & \dots & w_{N_{\ell+1}N_\ell}^{\ell+1} \end{bmatrix} \begin{bmatrix} \phi'(z_1^{\ell+1}) & & \\ & \ddots & \\ & & \phi'(z_{N_{\ell+1}}^{\ell+1}) \end{bmatrix} \begin{bmatrix} \frac{\partial e}{\partial a_1^{\ell+1}} \\ \vdots \\ \frac{\partial e}{\partial a_{N_{\ell+1}}^{\ell+1}} \end{bmatrix}$$

$$\delta^{\ell} = (W^{\ell+1})^{\top} \mathrm{Diag}(\phi^{\ell+1'}) \delta^{\ell+1} = V^{\ell+1} \delta^{\ell+1} = V^{\ell+1} V^{\ell+2} \delta^{\ell+2}$$

GD/SGD for MLP: Sample-wise Gradient Computation

Generalized setting:

$$\frac{\partial e}{\partial w_{ij}^{\ell}} = \frac{\partial e}{\partial z_i^{\ell}} a_j^{\ell-1}$$

$$\frac{\partial e}{\partial z_i^{\ell}} = \frac{\partial e}{\partial a_i^{\ell}} \phi'(z_i^{\ell})$$

$$\begin{bmatrix} \frac{\partial e}{\partial a_1^{\ell}} \\ \vdots \\ \frac{\partial e}{\partial a_{N_\ell}^{\ell}} \end{bmatrix} = \begin{bmatrix} \phi'(z_1^{\ell+1}) w_{11}^{\ell+1} & \dots & \phi'(z_{N_{\ell+1}}^{\ell+1}) w_{N_{\ell+1}1}^{\ell+1} \\ \vdots & \dots & \vdots \\ \phi'(z_1^{\ell+1}) w_{1N_\ell}^{\ell+1} & \dots & \phi'(z_{N_{\ell+1}}^{\ell+1}) w_{N_{\ell+1}N_\ell}^{\ell+1} \end{bmatrix} \begin{bmatrix} \frac{\partial e}{\partial a_1^{\ell+1}} \\ \vdots \\ \frac{\partial e}{\partial a_{N_{\ell+1}}^{\ell+1}} \end{bmatrix}$$

$$\Longrightarrow \begin{bmatrix} \frac{\partial e}{\partial a_1^{\ell}} \\ \vdots \\ \frac{\partial e}{\partial a_{N_\ell}^{\ell}} \end{bmatrix} = \begin{bmatrix} w_{11}^{\ell+1} & \dots & w_{N_{\ell+1}1}^{\ell+1} \\ \vdots & \dots & \vdots \\ w_{1N_\ell}^{\ell+1} & \dots & w_{N_{\ell+1}N_\ell}^{\ell+1} \end{bmatrix} \begin{bmatrix} \phi'(z_1^{\ell+1}) & & \\ & \ddots & \\ & & \phi'(z_{N_{\ell+1}}^{\ell+1}) \end{bmatrix} \begin{bmatrix} \frac{\partial e}{\partial a_1^{\ell+1}} \\ \vdots \\ \frac{\partial e}{\partial a_{N_{\ell+1}}^{\ell+1}} \end{bmatrix}$$

$$\delta^{\ell} = (W^{\ell+1})^{\top} \mathrm{Diag}(\phi^{\ell+1'}) \delta^{\ell+1} = V^{\ell+1} \delta^{\ell+1} = V^{\ell+1} V^{\ell+2} \delta^{\ell+2} = V^{\ell+1} V^{\ell+2} \dots V^{L} \delta^{L}$$

Assume: The last layer in the network is L.

GD/SGD for MLP: Sample-wise Gradient Computation

Generalized setting:

$$\frac{\partial e}{\partial w_{ij}^{\ell}} = \frac{\partial e}{\partial z_i^{\ell}} a_j^{\ell-1} = \frac{\partial e}{\partial a_i^{\ell}} \phi'(z_i^{\ell}) a_j^{\ell-1}$$

$$\implies \begin{bmatrix} \frac{\partial e}{\partial w_{1j}^{\ell}} \\ \vdots \\ \frac{\partial e}{\partial w_{N_\ell j}^{\ell}} \end{bmatrix} = \begin{bmatrix} \frac{\partial e}{\partial a_1^{\ell}} \phi'(z_1^{\ell}) a_j^{\ell-1} \\ \vdots \\ \frac{\partial e}{\partial a_{N_\ell}^{\ell}} \phi'(z_{N_\ell}^{\ell}) a_j^{\ell-1} \end{bmatrix}$$

GD/SGD for MLP: Sample-wise Gradient Computation

Generalized setting:

$$\frac{\partial e}{\partial w_{ij}^{\ell}} = \frac{\partial e}{\partial z_i^{\ell}} a_j^{\ell-1} = \frac{\partial e}{\partial a_i^{\ell}} \phi'(z_i^{\ell}) a_j^{\ell-1}$$

$$\Longrightarrow \begin{bmatrix} \frac{\partial e}{\partial w_{1j}^{\ell}} \\ \vdots \\ \frac{\partial e}{\partial w_{N_\ell j}^{\ell}} \end{bmatrix} = \begin{bmatrix} \frac{\partial e}{\partial a_1^{\ell}} \phi'(z_1^{\ell}) a_j^{\ell-1} \\ \vdots \\ \frac{\partial e}{\partial a_{N_\ell}^{\ell}} \phi'(z_{N_\ell}^{\ell}) a_j^{\ell-1} \end{bmatrix} = \begin{bmatrix} \phi'(z_1^{\ell}) & & \\ & \ddots & \\ & & \phi'(z_{N_\ell}^{\ell}) \end{bmatrix} \begin{bmatrix} \frac{\partial e}{\partial a_1^{\ell}} \\ \vdots \\ \frac{\partial e}{\partial a_{N_\ell}^{\ell}} \end{bmatrix} \begin{bmatrix} a_j^{\ell-1} \end{bmatrix}$$

GD/SGD for MLP: Sample-wise Gradient Computation

Generalized setting:

$$\frac{\partial e}{\partial w_{ij}^{\ell}} = \frac{\partial e}{\partial z_i^{\ell}} a_j^{\ell-1} = \frac{\partial e}{\partial a_i^{\ell}} \phi'(z_i^{\ell}) a_j^{\ell-1}$$

$$\Longrightarrow \begin{bmatrix} \frac{\partial e}{\partial w_{1j}^{\ell}} \\ \vdots \\ \frac{\partial e}{\partial w_{N_\ell j}^{\ell}} \end{bmatrix} = \begin{bmatrix} \frac{\partial e}{\partial a_1^{\ell}} \phi'(z_1^{\ell}) a_j^{\ell-1} \\ \vdots \\ \frac{\partial e}{\partial a_{N_\ell}^{\ell}} \phi'(z_{N_\ell}^{\ell}) a_j^{\ell-1} \end{bmatrix} = \begin{bmatrix} \phi'(z_1^{\ell}) & & \\ & \ddots & \\ & & \phi'(z_{N_\ell}^{\ell}) \end{bmatrix} \begin{bmatrix} \frac{\partial e}{\partial a_1^{\ell}} \\ \vdots \\ \frac{\partial e}{\partial a_{N_\ell}^{\ell}} \end{bmatrix} \begin{bmatrix} a_j^{\ell-1} \end{bmatrix}$$

$$\Longrightarrow \begin{bmatrix} \frac{\partial e}{\partial w_{11}^{\ell}} & \cdots & \frac{\partial e}{\partial w_{1N_{\ell-1}}^{\ell}} \\ \vdots & \cdots & \vdots \\ \frac{\partial e}{\partial w_{N_\ell 1}^{\ell}} & \cdots & \frac{\partial e}{\partial w_{N_\ell N_{\ell-1}}^{\ell}} \end{bmatrix} = \begin{bmatrix} \phi'(z_1^{\ell}) & & \\ & \ddots & \\ & & \phi'(z_{N_\ell}^{\ell}) \end{bmatrix} \begin{bmatrix} \frac{\partial e}{\partial a_1^{\ell}} \\ \vdots \\ \frac{\partial e}{\partial a_{N_\ell}^{\ell}} \end{bmatrix} \begin{bmatrix} a_1^{\ell-1} & \cdots & a_{N_{\ell-1}}^{\ell-1} \end{bmatrix}$$

GD/SGD for MLP: Sample-wise Gradient Computation

Generalized setting:

$$\frac{\partial e}{\partial w_{ij}^{\ell}} = \frac{\partial e}{\partial z_i^{\ell}} a_j^{\ell-1} = \frac{\partial e}{\partial a_i^{\ell}} \phi'(z_i^{\ell}) a_j^{\ell-1}$$

$$\implies \begin{bmatrix} \frac{\partial e}{\partial w_{1j}^{\ell}} \\ \vdots \\ \frac{\partial e}{\partial w_{N_\ell j}^{\ell}} \end{bmatrix} = \begin{bmatrix} \frac{\partial e}{\partial a_1^{\ell}} \phi'(z_1^{\ell}) a_j^{\ell-1} \\ \vdots \\ \frac{\partial e}{\partial a_{N_\ell}^{\ell}} \phi'(z_{N_\ell}^{\ell}) a_j^{\ell-1} \end{bmatrix} = \begin{bmatrix} \phi'(z_1^{\ell}) & & \\ & \ddots & \\ & & \phi'(z_{N_\ell}^{\ell}) \end{bmatrix} \begin{bmatrix} \frac{\partial e}{\partial a_1^{\ell}} \\ \vdots \\ \frac{\partial e}{\partial a_{N_\ell}^{\ell}} \end{bmatrix} \begin{bmatrix} a_j^{\ell-1} \end{bmatrix}$$

$$\implies \begin{bmatrix} \frac{\partial e}{\partial w_{11}^{\ell}} & \cdots & \frac{\partial e}{\partial w_{1N_{\ell-1}}^{\ell}} \\ \vdots & \cdots & \vdots \\ \frac{\partial e}{\partial w_{N_\ell 1}^{\ell}} & \cdots & \frac{\partial e}{\partial w_{N_\ell N_{\ell-1}}^{\ell}} \end{bmatrix} = \begin{bmatrix} \phi'(z_1^{\ell}) & & \\ & \ddots & \\ & & \phi'(z_{N_\ell}^{\ell}) \end{bmatrix} \begin{bmatrix} \frac{\partial e}{\partial a_1^{\ell}} \\ \vdots \\ \frac{\partial e}{\partial a_{N_\ell}^{\ell}} \end{bmatrix} \begin{bmatrix} a_1^{\ell-1} & \cdots & a_{N_{\ell-1}}^{\ell-1} \end{bmatrix}$$

$$\implies \nabla_{W^\ell} e = \mathrm{Diag}(\phi^{\ell\prime}) \delta^{\ell} (a^{\ell-1})^{\top}$$

GD/SGD for MLP: Sample-wise Gradient Computation

Generalized setting:

$$\frac{\partial e}{\partial w_{ij}^{\ell}} = \frac{\partial e}{\partial z_i^{\ell}} a_j^{\ell-1} = \frac{\partial e}{\partial a_i^{\ell}} \phi'(z_i^{\ell}) a_j^{\ell-1}$$

$$\implies \begin{bmatrix} \frac{\partial e}{\partial w_{1j}^{\ell}} \\ \vdots \\ \frac{\partial e}{\partial w_{N_\ell j}^{\ell}} \end{bmatrix} = \begin{bmatrix} \frac{\partial e}{\partial a_1^{\ell}} \phi'(z_1^{\ell}) a_j^{\ell-1} \\ \vdots \\ \frac{\partial e}{\partial a_{N_\ell}^{\ell}} \phi'(z_{N_\ell}^{\ell}) a_j^{\ell-1} \end{bmatrix} = \begin{bmatrix} \phi'(z_1^{\ell}) & & \\ & \ddots & \\ & & \phi'(z_{N_\ell}^{\ell}) \end{bmatrix} \begin{bmatrix} \frac{\partial e}{\partial a_1^{\ell}} \\ \vdots \\ \frac{\partial e}{\partial a_{N_\ell}^{\ell}} \end{bmatrix} \begin{bmatrix} a_j^{\ell-1} \end{bmatrix}$$

$$\implies \begin{bmatrix} \frac{\partial e}{\partial w_{11}^{\ell}} & \cdots & \frac{\partial e}{\partial w_{1N_{\ell-1}}^{\ell}} \\ \vdots & \cdots & \vdots \\ \frac{\partial e}{\partial w_{N_\ell 1}^{\ell}} & \cdots & \frac{\partial e}{\partial w_{N_\ell N_{\ell-1}}^{\ell}} \end{bmatrix} = \begin{bmatrix} \phi'(z_1^{\ell}) & & \\ & \ddots & \\ & & \phi'(z_{N_\ell}^{\ell}) \end{bmatrix} \begin{bmatrix} \frac{\partial e}{\partial a_1^{\ell}} \\ \vdots \\ \frac{\partial e}{\partial a_{N_\ell}^{\ell}} \end{bmatrix} \begin{bmatrix} a_1^{\ell-1} & \cdots & a_{N_{\ell-1}}^{\ell-1} \end{bmatrix}$$

$$\implies \nabla_{W^\ell} e = \mathrm{Diag}(\phi^{\ell\prime}) \delta^{\ell} (a^{\ell-1})^{\top} = \mathrm{Diag}(\phi^{\ell\prime}) V^{\ell+1} \ldots V^{L} \delta^{L} (a^{\ell-1})^{\top}$$

GD/SGD for MLP: Sample-wise Gradient Computation

Generalized setting:

$$\frac{\partial e}{\partial w_{ij}^{\ell}} = \frac{\partial e}{\partial z_i^{\ell}} a_j^{\ell-1} = \frac{\partial e}{\partial a_i^{\ell}} \phi'(z_i^{\ell}) a_j^{\ell-1}$$

$$\implies \begin{bmatrix} \frac{\partial e}{\partial w_{1j}^{\ell}} \\ \vdots \\ \frac{\partial e}{\partial w_{N_\ell j}^{\ell}} \end{bmatrix} = \begin{bmatrix} \frac{\partial e}{\partial a_1^{\ell}} \phi'(z_1^{\ell}) a_j^{\ell-1} \\ \vdots \\ \frac{\partial e}{\partial a_{N_\ell}^{\ell}} \phi'(z_{N_\ell}^{\ell}) a_j^{\ell-1} \end{bmatrix} = \begin{bmatrix} \phi'(z_1^{\ell}) & & \\ & \ddots & \\ & & \phi'(z_{N_\ell}^{\ell}) \end{bmatrix} \begin{bmatrix} \frac{\partial e}{\partial a_1^{\ell}} \\ \vdots \\ \frac{\partial e}{\partial a_{N_\ell}^{\ell}} \end{bmatrix} \begin{bmatrix} a_j^{\ell-1} \end{bmatrix}$$

$$\implies \begin{bmatrix} \frac{\partial e}{\partial w_{11}^{\ell}} & \cdots & \frac{\partial e}{\partial w_{1N_{\ell-1}}^{\ell}} \\ \vdots & \cdots & \vdots \\ \frac{\partial e}{\partial w_{N_\ell 1}^{\ell}} & \cdots & \frac{\partial e}{\partial w_{N_\ell N_{\ell-1}}^{\ell}} \end{bmatrix} = \begin{bmatrix} \phi'(z_1^{\ell}) & & \\ & \ddots & \\ & & \phi'(z_{N_\ell}^{\ell}) \end{bmatrix} \begin{bmatrix} \frac{\partial e}{\partial a_1^{\ell}} \\ \vdots \\ \frac{\partial e}{\partial a_{N_\ell}^{\ell}} \end{bmatrix} \begin{bmatrix} a_1^{\ell-1} & \cdots & a_{N_{\ell-1}}^{\ell-1} \end{bmatrix}$$

$$\implies \nabla_{W^\ell} e = \mathrm{Diag}(\phi^{\ell\prime})\delta^{\ell}(a^{\ell-1})^{\top} = \mathrm{Diag}(\phi^{\ell\prime})V^{\ell+1}\ldots V^{L}\delta^{L}(a^{\ell-1})^{\top}$$

Homework: Assume each neuron with a bias term and compute the gradients of loss with respect to bias terms.

GD/SGD for MLP: Sample-wise Gradient Computation

Generalized setting:

$$\nabla_{W^\ell} e = \text{Diag}(\phi^{\ell\prime})\delta^\ell (a^{\ell-1})^\top = \text{Diag}(\phi^{\ell\prime}) V^{\ell+1} \dots V^L \delta^L (a^{\ell-1})^\top$$

- **Recall:** W^ℓ represents the matrix of weights connecting layer $\ell - 1$ to layer ℓ.
- **Recall:** δ^L represents the error gradients with respect to the activations at the last layer.

GD/SGD for MLP: Sample-wise Gradient Computation

Generalized setting:

$$\nabla_{W^\ell} e = \text{Diag}(\phi^{\ell\prime})\delta^\ell (a^{\ell-1})^\top = \text{Diag}(\phi^{\ell\prime}) V^\ell \dots V^L \delta^L (a^{\ell-1})^\top$$

- **Recall:** W^ℓ represents the matrix of weights connecting layer $\ell - 1$ to layer ℓ.
- **Recall:** δ^L represents the error gradients with respect to the activations at the last layer.
- Hence, the error gradients with respect to weights W^ℓ depend on the error gradients δ^L at the last layer.

GD/SGD for MLP: Sample-wise Gradient Computation

Generalized setting:

$$\nabla_{W^\ell} e = \text{Diag}(\phi^{\ell\prime})\delta^\ell (a^{\ell-1})^\top = \text{Diag}(\phi^{\ell\prime}) V^{\ell+1} \dots V^L \delta^L (a^{\ell-1})^\top$$

- **Recall:** W^ℓ represents the matrix of weights connecting layer $\ell - 1$ to layer ℓ.
- **Recall:** δ^L represents the error gradients with respect to the activations at the last layer.
- Hence, the error gradients with respect to weights W^ℓ depend on the error gradients δ^L at the last layer.
- **Or** the error gradients at the last layer flow back into the previous layers.

GD/SGD for MLP: Sample-wise Gradient Computation

Generalized setting:

$$\nabla_{W^\ell} e = \text{Diag}(\phi^{\ell\prime})\delta^\ell (a^{\ell-1})^\top = \text{Diag}(\phi^{\ell\prime}) V^{\ell+1} \dots V^L \delta^L (a^{\ell-1})^\top$$

- **Recall:** W^ℓ represents the matrix of weights connecting layer $\ell - 1$ to layer ℓ.
- **Recall:** δ^L represents the error gradients with respect to the activations at the last layer.
- Hence, the error gradients with respect to weights W^ℓ depend on the error gradients δ^L at the last layer.
- **Or** the error gradients at the last layer flow back into the previous layers.

This error gradient flow back is called Backpropagation!

GD/SGD for MLP: Sample-wise Gradient Computation

Generalized setting:

$$\nabla_{W^\ell} e = \text{Diag}(\phi^{\ell\prime})\delta^\ell (a^{\ell-1})^\top = \text{Diag}(\phi^{\ell\prime}) V^{\ell+1} \dots V^L \delta^L (a^{\ell-1})^\top$$

- If $V^{\ell+1} \dots V^L \delta^L$ leads to large values (in magnitude), then $\nabla_{W^\ell} e$ gradients can also become large (in magnitude).

GD/SGD for MLP: Sample-wise Gradient Computation

Generalized setting:

$$\nabla_{W^\ell} e = \text{Diag}(\phi^{\ell'})\delta^\ell (a^{\ell-1})^\top = \text{Diag}(\phi^{\ell'}) V^{\ell+1} \dots V^L \delta^L (a^{\ell-1})^\top$$

- If $V^{\ell+1} \dots V^L \delta^L$ leads to large values (in magnitude), then $\nabla_{W^\ell} e$ gradients can also become large (in magnitude).
- Similarly, if $V^{\ell+1} \dots V^L \delta^L$ leads to small values (in magnitude), then $\nabla_{W^\ell} e$ gradients can also approach zero (in magnitude).

GD/SGD for MLP: Sample-wise Gradient Computation

Generalized setting:

$$\nabla_{W^\ell} e = \text{Diag}(\phi^{\ell\prime})\delta^\ell (a^{\ell-1})^\top = \text{Diag}(\phi^{\ell\prime}) V^{\ell+1} \dots V^L \delta^L (a^{\ell-1})^\top$$

- If $V^{\ell+1} \dots V^L \delta^L$ leads to large values (in magnitude), then $\nabla_{W^\ell} e$ gradients can also become large (in magnitude). This problem is called exploding gradient problem.
- Similarly, if $V^{\ell+1} \dots V^L \delta^L$ leads to small values (in magnitude), then $\nabla_{W^\ell} e$ gradients can also approach zero (in magnitude). This problem is called vanishing gradient problem.

GD/SGD for MLP: Sample-wise Gradient Computation

Generalized setting:

$$\nabla_{W^\ell} e = \text{Diag}(\phi^{\ell'})\delta^\ell (a^{\ell-1})^\top = \text{Diag}(\phi^{\ell'}) V^{\ell+1} \dots V^L \delta^L (a^{\ell-1})^\top$$

$$\implies \|\nabla_{W^\ell} e\|_2 \leq \|\text{Diag}(\phi^{\ell'})\|_2 \| V^{\ell+1} \dots V^L \delta^L\|_2 \|(a^{\ell-1})^\top\|_2$$

- If $V^\ell + 1 \dots V^L \delta^L$ leads to large values (in magnitude), then $\nabla_{W^\ell} e$ gradients can also become large (in magnitude). This problem is called exploding gradient problem.
- Similarly, if $V^{\ell+1} \dots V^L \delta^L$ leads to small values (in magnitude), then $\nabla_{W^\ell} e$ gradients can also approach zero (in magnitude). This problem is called vanishing gradient problem.

GD/SGD for MLP: Sample-wise Gradient Computation

Generalized setting:

$$\nabla_{W^\ell} e = \text{Diag}(\phi^{\ell'})\delta^\ell (a^{\ell-1})^\top = \text{Diag}(\phi^{\ell'}) V^{\ell+1} \dots V^L \delta^L (a^{\ell-1})^\top$$

$$\text{recall:}\delta^L = \begin{bmatrix} \frac{\partial e}{\partial a_1^L} \\ \vdots \\ \frac{\partial e}{\partial a_{N_L}^L} \end{bmatrix}$$

- $\frac{\partial e}{\partial a_i^L} =: \frac{\partial e}{\partial \hat{y}_i}$ denotes the gradient term with respect to a i-th neuron in the last (L-th) layer.
- So far we have considered squared error function.
- We will see more examples of constructing appropriate error functions and the corresponding gradient computation.

Multi Layer Perceptron for Prediction Tasks

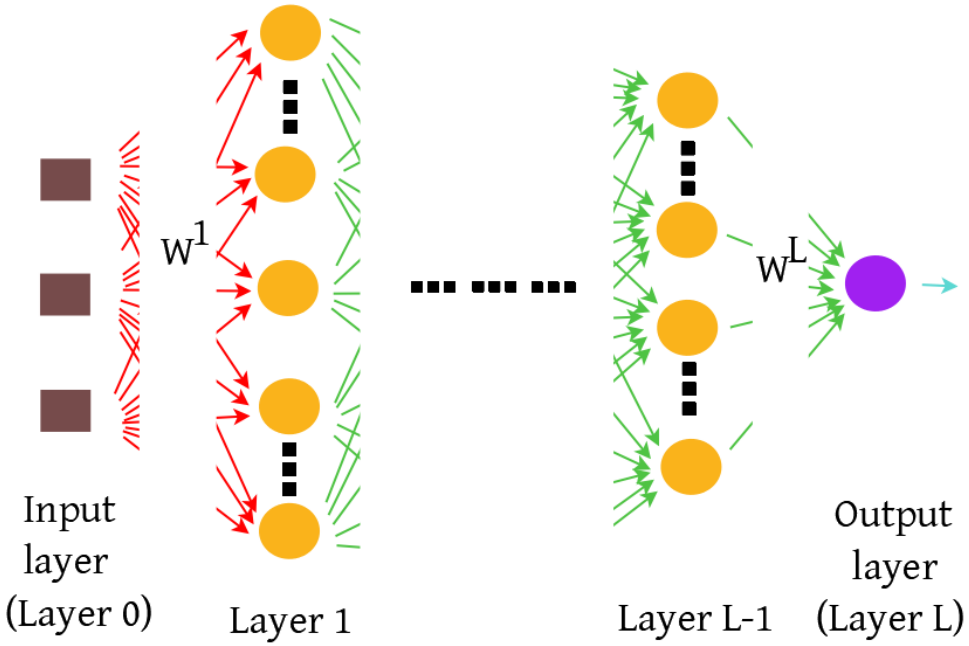

- **Input:** Training Data $D = \{(x^i, y^i)\}_{i=1}^{S}$, $x^i \in \mathcal{X} \subseteq \mathbb{R}^d$, $y \in \mathcal{Y}$, $\forall i \in \{1, \ldots, S\}$ and MLP architecture parametrized by weights w.
- **Aim of training MLP:** To learn a parametrized map $h_w : \mathcal{X} \to \mathcal{Y}$ such that for the training data D, we have $y^i = h_w(x^i)$, $\forall i \in \{1, \ldots, S\}$.
- **Aim of using the trained MLP model:** For an unseen sample $\hat{x} \in \mathcal{X}$, predict $\hat{y} = h_w(\hat{x}) = MLP(\hat{x}; w)$.

Multi Layer Perceptron for Prediction Tasks

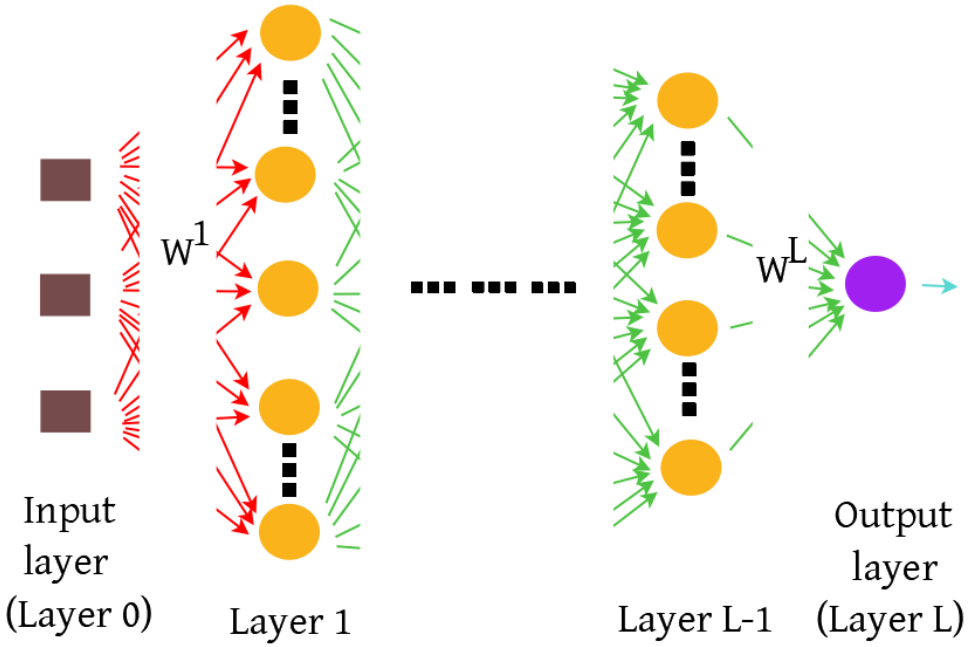

Methodology for training MLP

- Design a suitable loss (or error) function $e : \mathcal{Y} \times \mathcal{Y} \to [0, +\infty)$ to compare the actual label y^i and the prediction $\hat{y}^i$ made by MLP using $e(y^i, \hat{y}^i)$, $\forall i\{1, \ldots, S\}$.
- Usually the error is parametrized by the weights w of the MLP and is denoted by $e(\hat{y}^i, y^i; w)$.
- Use Gradient descent/SGD/mini-batch SGD to minimize the total error:

$$E = \sum_{i=1}^{S} e(\hat{y}^i, y^i; w) =: \sum_{i=1}^{S} e^i(w).$$

Stochastic Gradient Descent for training MLP

SGD Algorithm to train MLP

- **Input:** Training Data $D = \{(x^i, y^i)\}_{i=1}^{S}$, $x^i \in \mathcal{X} \subseteq \mathbb{R}^d$, $y^i \in \mathcal{Y}$, $\forall i$; MLP architecture, max epochs K, learning rates γ_k, $\forall k \in \{1, \ldots, K\}$.
- Start with $w^0 \in \mathbb{R}^d$.
- For $k = 0, 1, 2, \ldots, K$
  - Choose a sample $j_k \in \{1, \ldots, S\}$.
  - Find $\hat{y}^{j_k} = \text{MLP}(x^{j_k}; w^k)$. (forward pass)
  - Compute error $e^{j_k}(w^k)$.
  - Compute error gradient $\nabla_w e^{j_k}(w^k)$ using backpropagation.
  - Update: $w^{k+1} \leftarrow w^k - \gamma_k \nabla_w e^{j_k}(w^k)$.
- **Output:** $w^* = w^{K+1}$.

Multi Layer Perceptron for Prediction Tasks

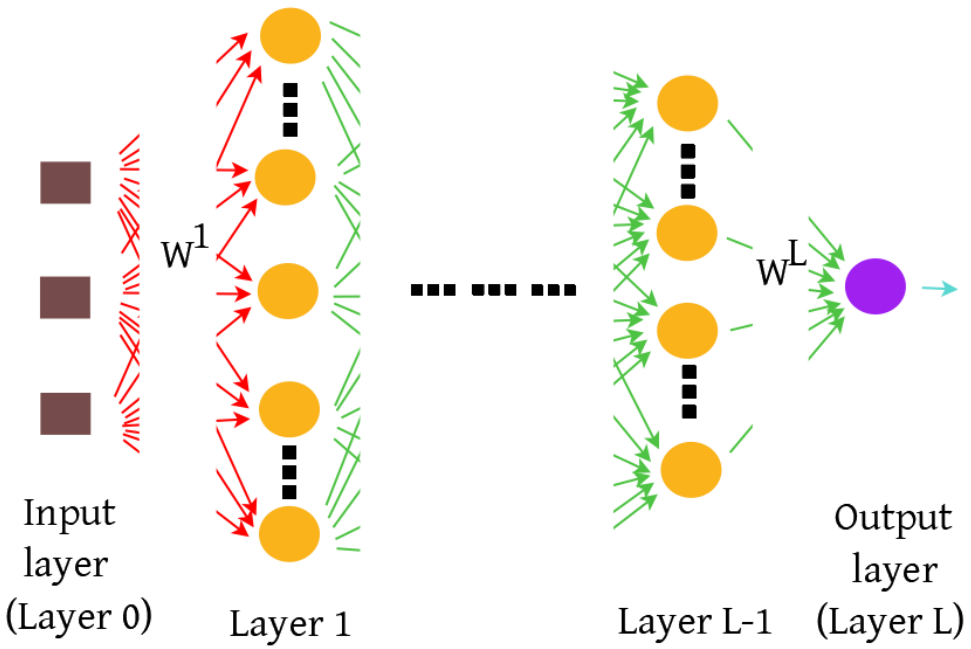

Recall forward pass: For an arbitrary sample (x, y) from training data D, and the MLP with weights $w = (W^1, W^2 \ldots, W^L)$, the prediction $\hat{y}$ is computed using forward pass as:

$$\hat{y} = \text{MLP}(x; w) = \phi(W^L \phi(W^{L-1} \ldots \phi(W^1 x) \ldots)).$$

Multi Layer Perceptron for Prediction Tasks

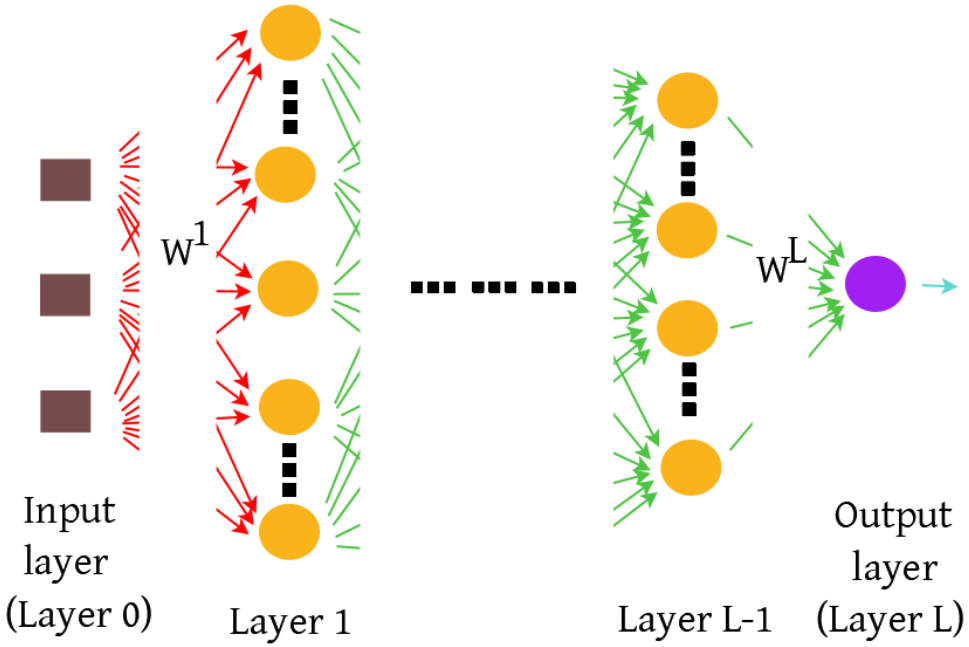

Recall backpropagation: For an arbitrary sample (x, y) from training data D, and the MLP with weights $w = (W^1, W^2 \ldots, W^L)$, the error gradient with respect to weights at ℓ-th layer is computed as:

$$\nabla_{W^\ell} e = \text{Diag}(\phi^{\ell\prime})\delta^\ell (a^{\ell-1})^\top$$

Multi Layer Perceptron for Prediction Tasks

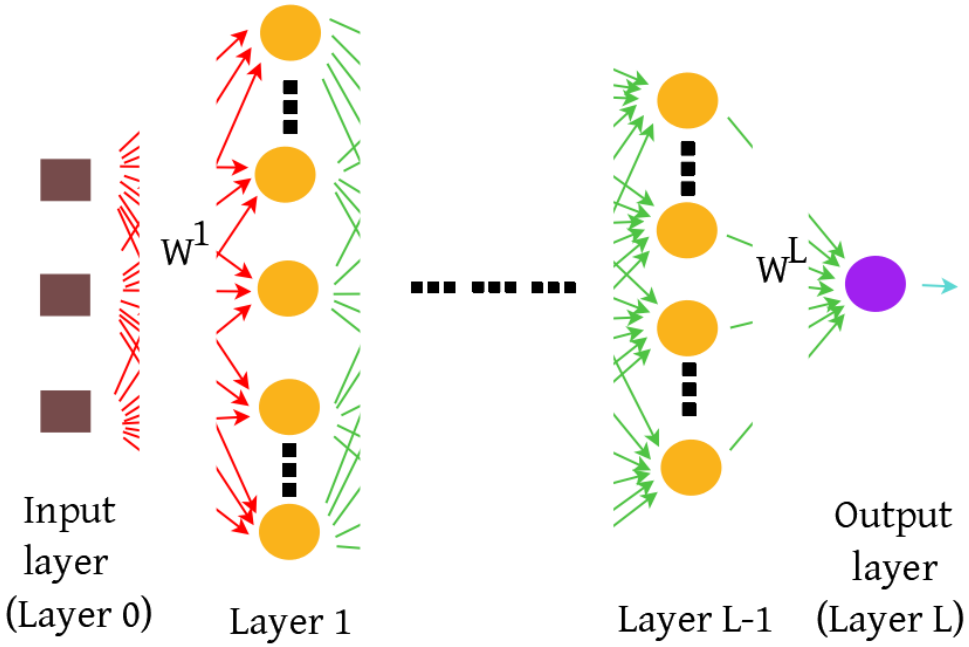

Recall backpropagation: For an arbitrary sample (x, y) from training data D, and the MLP with weights $w = (W^1, W^2 \ldots, W^L)$, the error gradient with respect to weights at ℓ-th layer is computed as:

$$\nabla_{W^\ell} e = \text{Diag}(\phi^{\ell\prime})\delta^\ell (a^{\ell-1})^\top$$

$$\text{where } \text{Diag}(\phi^{\ell\prime}) = \begin{bmatrix} \phi'(z_1^\ell) & & \\ & \ddots & \\ & & \phi'(z_{N_\ell}^\ell) \end{bmatrix}, \ \delta^\ell = \begin{bmatrix} \frac{\partial e}{\partial a_1^\ell} \\ \vdots \\ \frac{\partial e}{\partial a_{N_\ell}^\ell} \end{bmatrix} \text{ and } a^{\ell-1} = \begin{bmatrix} a_1^{\ell-1} \\ \vdots \\ a_{N_{\ell-1}}^{\ell-1} \end{bmatrix}.$$

Multi Layer Perceptron for Prediction Tasks

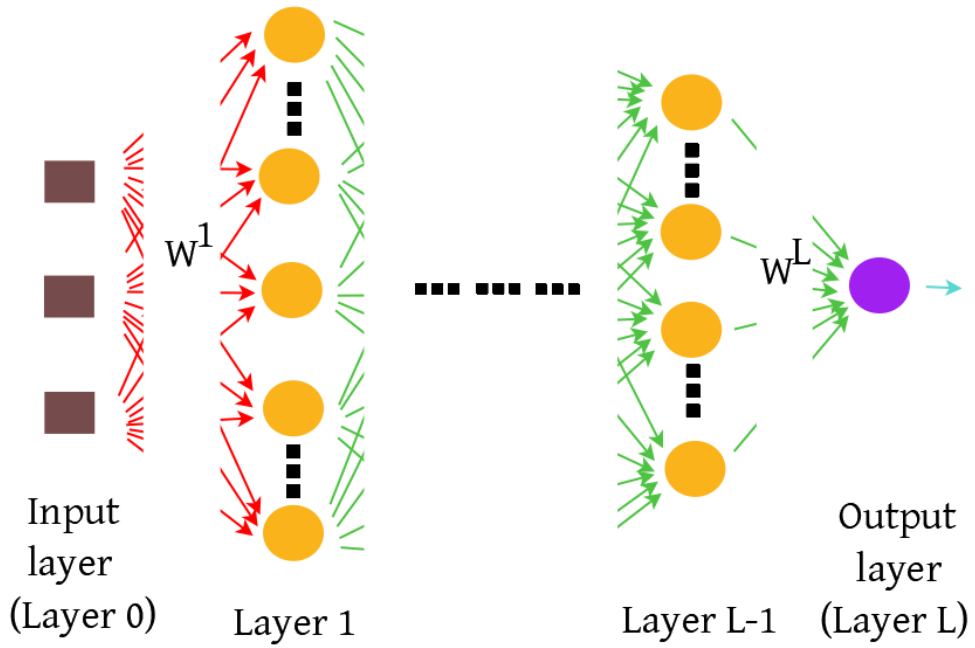

Recall backpropagation: For an arbitrary sample (x, y) from training data D, and the MLP with weights $w = (W^1, W^2 \ldots, W^L)$, the error gradient with respect to weights at ℓ-th layer is computed as:

$$\nabla_{W^\ell} e = \text{Diag}(\phi^{\ell'})\delta^\ell (a^{\ell-1})^\top = \text{Diag}(\phi^{\ell'}) V^{\ell+1} V^{\ell+2} \ldots V^L \delta^L (a^{\ell-1})^\top$$

where $V^{\ell+1} = (W^{\ell+1})^\top \text{Diag}(\phi^{\ell+1'})$.

Multi Layer Perceptron for Prediction Tasks

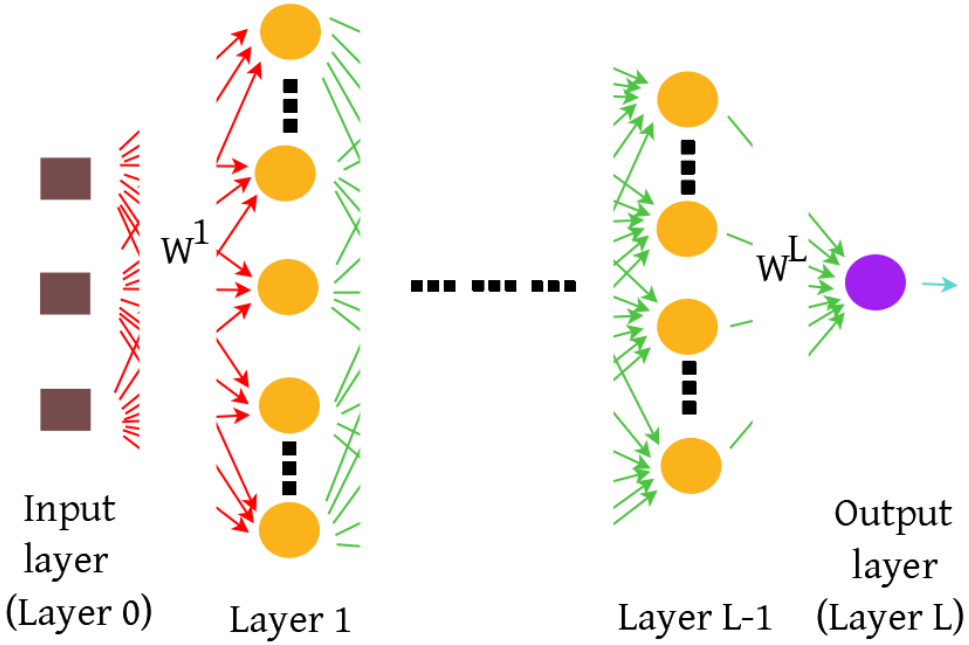

- **Task considered so far:** $\mathcal{Y} = \{+1, -1\}$.
- Corresponds to two-class (or binary) classification.
- Usually a single neuron at the last (L-th) layer of MLP, with logistic sigmoid function $\sigma : \mathbb{R} \to (0, 1)$ with $\sigma(z) = \frac{1}{1+e^{-z}}$, for some $z \in \mathbb{R}$.
- **Prediction:** $\text{MLP}(\hat{x}; w) = \sigma(W^L a^{L-1})$, followed by a thresholding function.

Multi Layer Perceptron for Prediction Tasks

Exercise: Discuss a loss function and last layer gradients with respect to activations, for two-class classification.

Multi Layer Perceptron for Prediction Tasks

Exercise: Illustrate the last layer details, loss function and last layer gradients with respect to activations, for multi-class classification.